The Peak in Performance

Distance based line protection
.5 to 1 cycle operating times
64 samples per cycle
Series compensated line protection

Protection Features

- Application on any voltage line
- Single and three phase tripping
- Lines with series capacitor compensation
- Four zones of phase and ground distance functions
- Pilot ground directional overcurrent
- Overcurrent backup
- Selectable pilot scheme logics
- Programmable logic
- Programmable I/O
- Out of Step Trip logic (Optional)

Protection Algorithm Advancements

- New Fourier calculation approach
  - Fourier built from phaselets
  - Fourier data purged by Fault Detector pickup
- Adaptive Zone 1 reach
  - Reach “grows” from 33% to 100% of setting

Modified Fourier Calculation

- High Speed Sampling
- Digital Mimic
- Phaselet Calculation
- Variable Window

High Speed Sampling

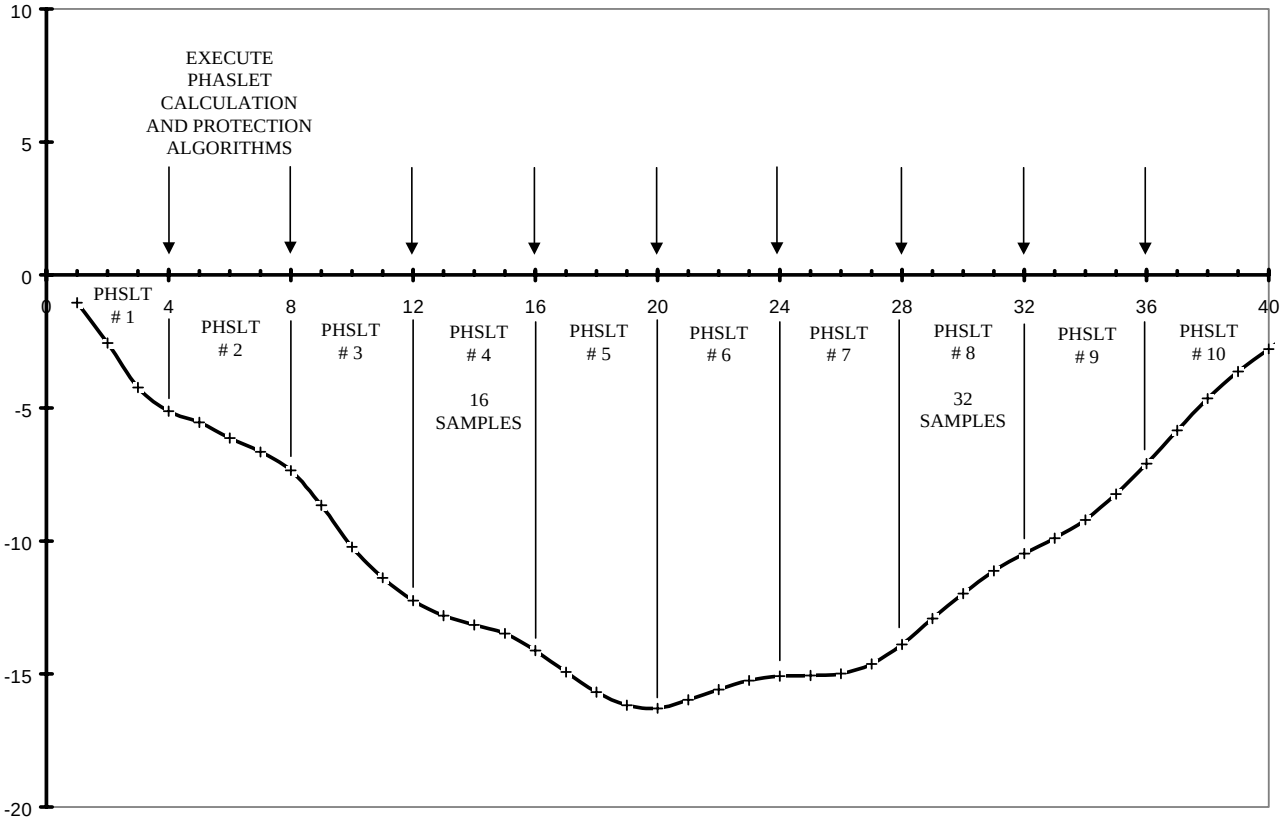

Mimic Algorithm

Time Domain:

$$IZ(t) = I(t) \bullet R + \frac{d}{dt}(I(t)) \bullet L$$

Sampled Data:

$$IZ(k - \frac{\delta}{2}) = \frac{(I(k+\delta) + I(k))}{2} \bullet R + \frac{(I(k+\delta) - I(k))}{\delta} \bullet L$$

Phaselet Definition

- Phaselets are partial sums of the products of the waveform samples and the sine/cosine coefficients.
- Input signals are sampled 64 times per cycle; protection algorithms are executed 16 times per cycle.
- Groups of phaselets may be scaled and added together to create a phasor.

Phaselet Calculation

$$\text{Phaselet Real}_p = \sum_{k=p\cdot P-P+1}^{p\cdot P} C_k \cdot X_k$$

$$\text{Phaselet Imaginary}_p = \sum_{k=p\cdot P-P+1}^{p\cdot P} -S_k \cdot X_k$$

Where:

N = Number of samples per cycle

p = phaselet index: there are N / P phaselets per cycle

P = the number of samples per phaselet

X_k = kth sample of the input signal

Phasor Calculation

Phaselets are converted to phasors by the following:

$$\begin{bmatrix} \text{Phasor Real}_n \\ \text{Phasor Imaginary}_n \end{bmatrix} = \begin{bmatrix} T_{RR}(n,W) & T_{RI}(n,W) \\ T_{IR}(n,W) & T_{II}(n,W) \end{bmatrix} \bullet \begin{bmatrix} \text{PhaseletSum Real}_n \\ \text{PhaseletSum Imaginary}_n \end{bmatrix}$$

Where:

$$\text{PhaseletSum Real}_n = \sum_{p=n-\frac{W}{P}+1}^{n} \text{Phaselet Real}_p$$

$$\text{PhaseletSum Imaginary}_n = \sum_{p=n-\frac{W}{P}+1}^{n} \text{Phaselet Imaginary}_p$$

n = Phasor index (N/P) W = Window size in samples

Phasor Calculation

For a one cycle window, the Fourier calculation becomes:

$$\text{Phasor Real}_n = \frac{2}{N} \cdot \left[\sum_{p=n-\frac{N}{P}+1}^{n} \text{Phaselet Real}_p \right]$$

$$\text{Phasor Imaginary}_n = \frac{2}{N} \cdot \left[\sum_{p=n-\frac{N}{P}+1}^{n} \text{Phaselet Imaginary}_p \right]$$

Variable Window

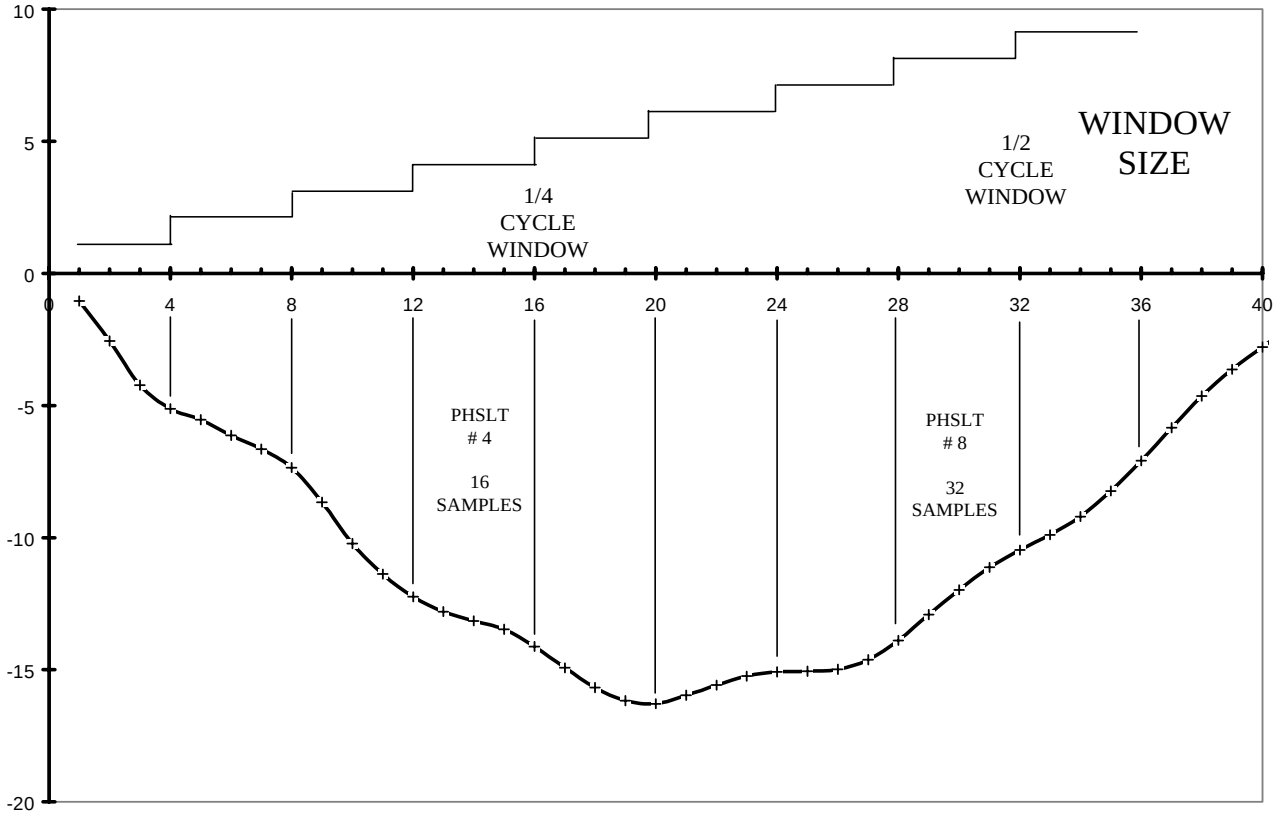

Variable Window Fourier Transform

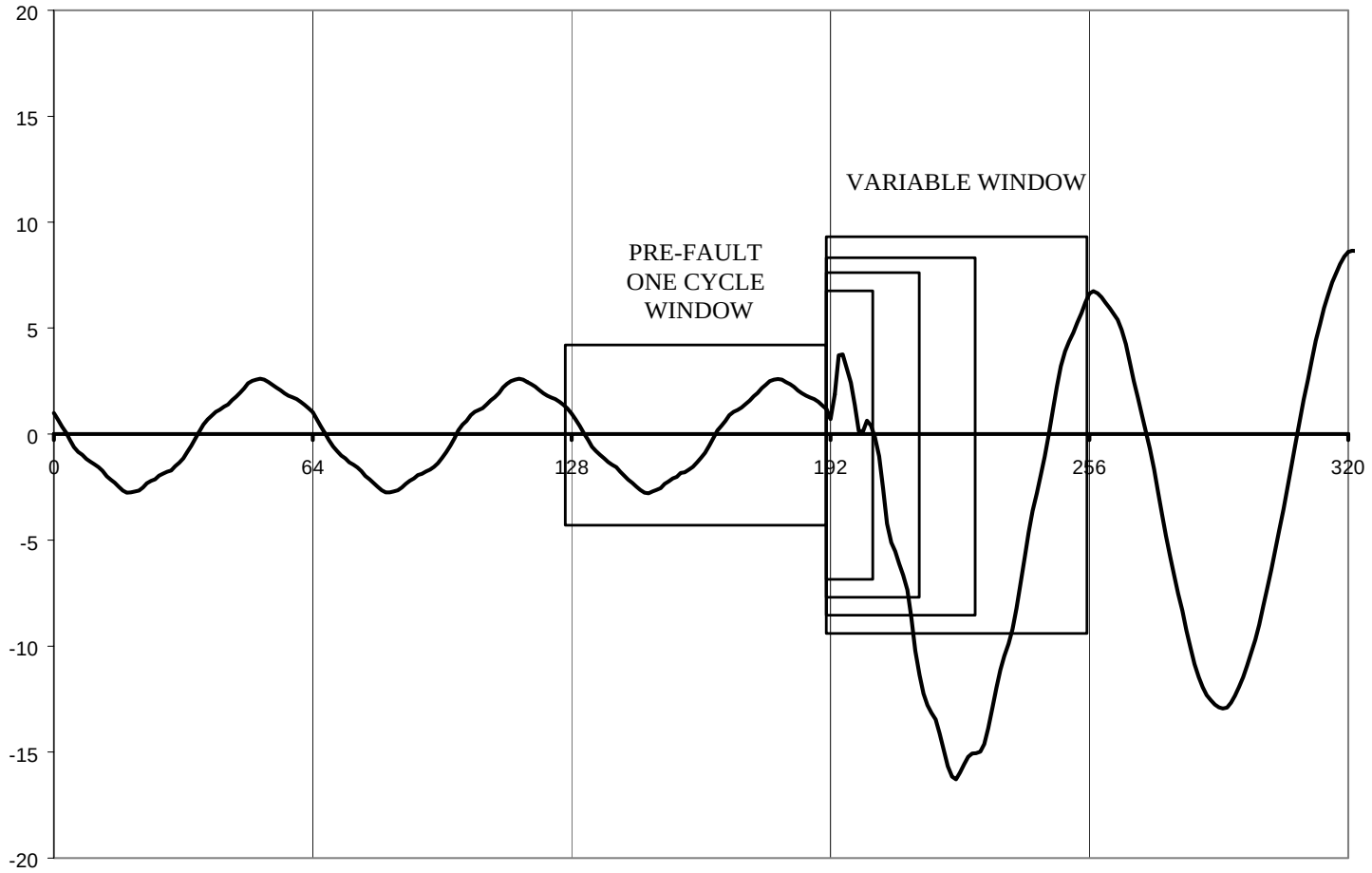

Variable Reach Zone 1

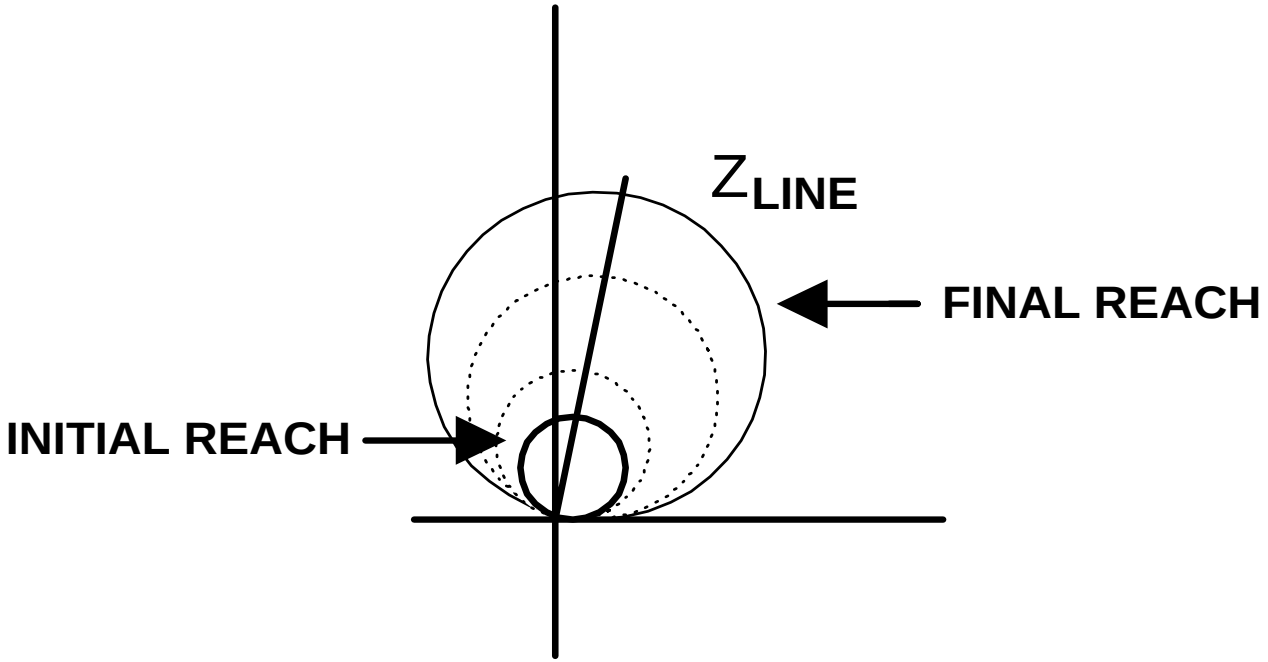

Variable Reach Zone 1

Zone 1 reach is set to 90 % of ZL.

WINDOW SIZE	% OF SET REACH
1/16 Cycle	0 (can not operate)
1/8 Cycle	33%
3/16 Cycle	65%
1/4 Cycle	75%
5/16 Cycle	83%
1/2 Cycle	90%
> 1/2 Cycle	100%

MPS Test Results

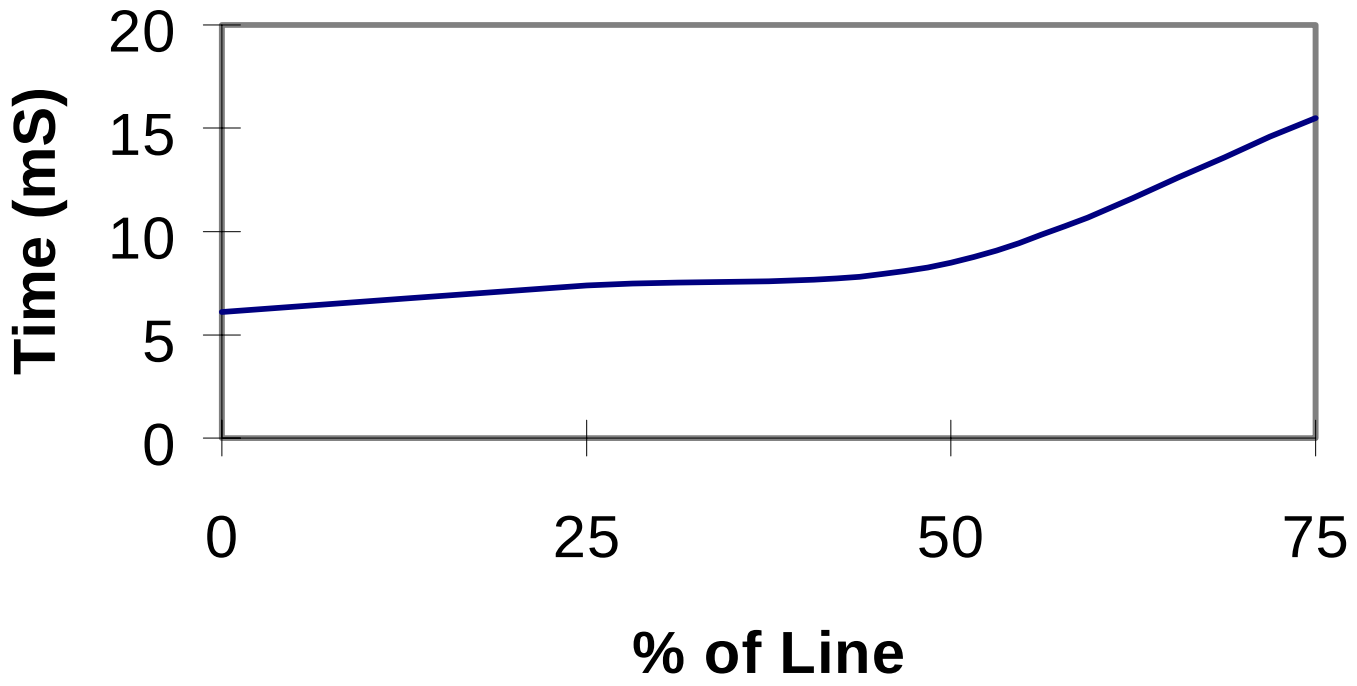

Overcurrent Functions

- Fault Detector
- Distance function supervision
- Phase & ground instantaneous units
- Ground time overcurrent (TOC)
- Unbalanced current alarm
- Instantaneous & TOC may be directionally controlled.
- Overload Alarm

Voltage Functions

- 3 single phase undervoltage detectors
- Positive sequence undervoltage detector
- 3 single phase over/undervoltage detectors
- Potential fuse failure detection logic
- Optional synch check voltage for recloser
- Optional positive sequence overvoltage functions

Directional Functions

- Forward and reverse negative sequence directional functions with adjustable compensation
- For use in Ground Directional Over Current protection (GDOC) and to supervise instantaneous & time over current functions

Impedance Measurement

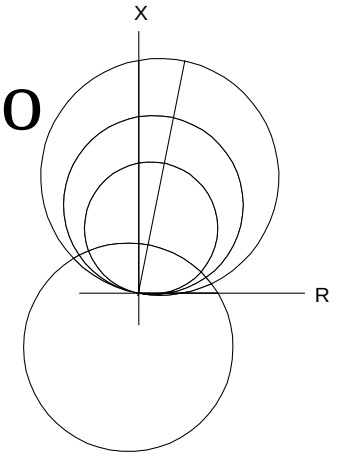

- 4 Zones of phase and ground mho distance functions
- Zone 4 is reversible
- Zones 2, 3 & 4 include independent phase and ground timers for step distance backup
- Zone 1 ground may be either a mho or reactance characteristic with adaptive mho supervision

Out-of-Step Functions

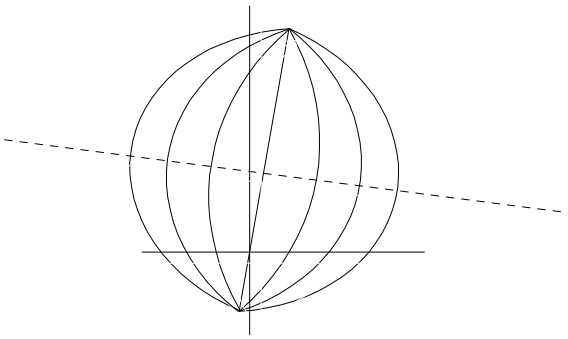

- Out-of-Step Blocking
- Out-of-Step Tripping

  3 independent positive sequence mho distance characteristics. Option to trip entering inner characteristic, or leaving outer characteristic.
- Extended oscillography data capture

Pilot Schemes

- Blocking
- PUTT
- POTT1 - Standard permissive overreaching
- POTT2 - POTT with blocking functions to improve transient blocking performance
- Hybrid - Includes Echo/Repeat logic and optional weak infeed tripping
- Step Distance backup is included in all schemes
- Programmable logic

Other Features

- 4 Setting Groups
- Line Pickup Logic
- Remote Open Detection for faster clearing of unbalanced faults
- Continuous Monitor
- PT Fuse Failure Detection

Monitoring Features

- Fault location calculation
- Event reporting
- Oscillography data capture
- Circuit breaker trip coil monitor
- Accumulated breaker duty
- Relay self test

Metering Features

- Local metering on LCD display
- Remote metering via communications
- True RMS calculation
- Current: Ia, Ib, Ic, and 3I0
- Voltage: Vag, Vbg, Vcg
- Frequency
- Three phase watts and vars

RMS Metering Values

- Compute RMS by taking the average of squares of each sample data
- RMS values are computed 16 time per cycle based on a sliding window of one cycle

Communications Features

- ASCII and GE-modem protocols standard
- Plug-in communications protocol converter
- Front nine pin RS232 port
- Rear 25 pin RS232 or 4 pin Phoenix RS485
- Optional second rear 25 pin RS232/RS485
- Rear ports user selectable as RS232 or RS485
- All ports independently settable

Programmable Logic Summary

- Maximum of 40 logic gates (AND, OR, NOT)

  Maximum of 4 inputs per gate
- Maximum of 8 programmable timers

  Pickup/dropout range of 0 to 60 seconds in 1 ms steps
- Maximum of 8 counters and latches
- Fully assignable I/O

Programmable Logic, Inputs, and Outputs

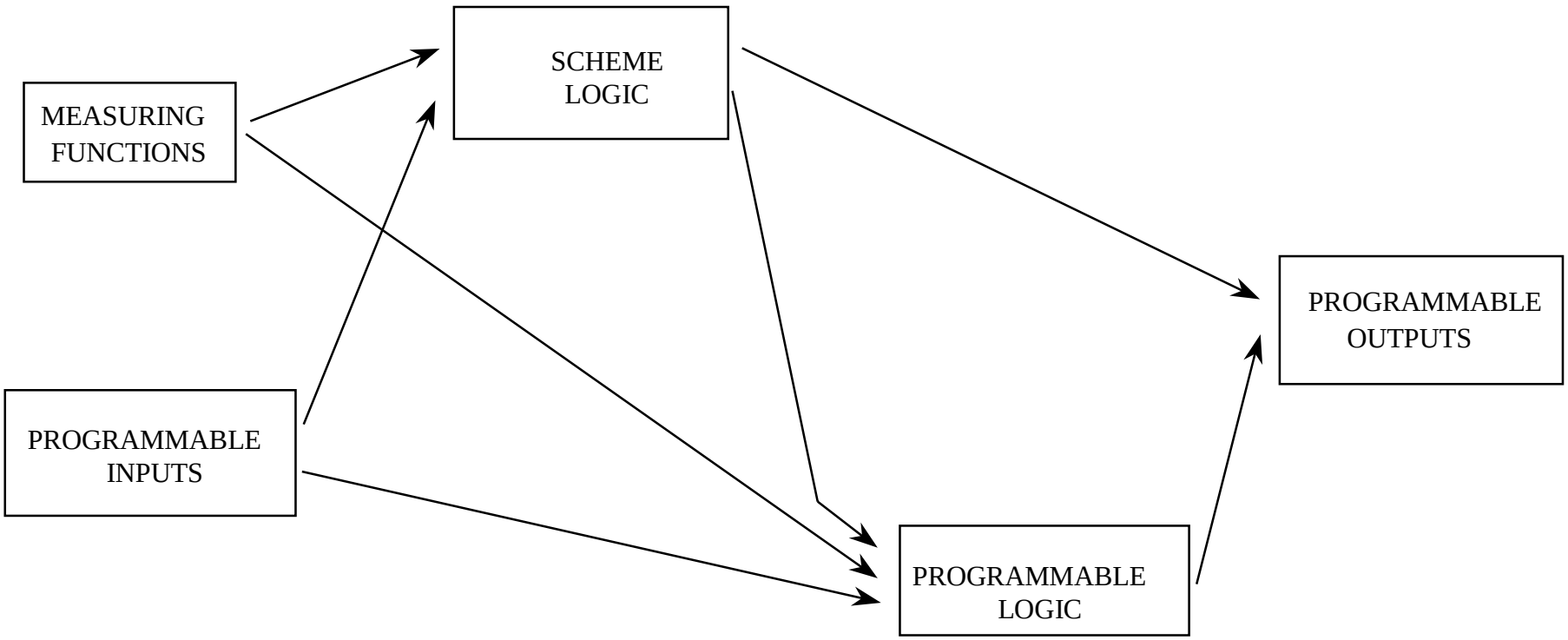

Expression Builder

User defines logic which program then builds into Boolean expression for downloading to ALPS

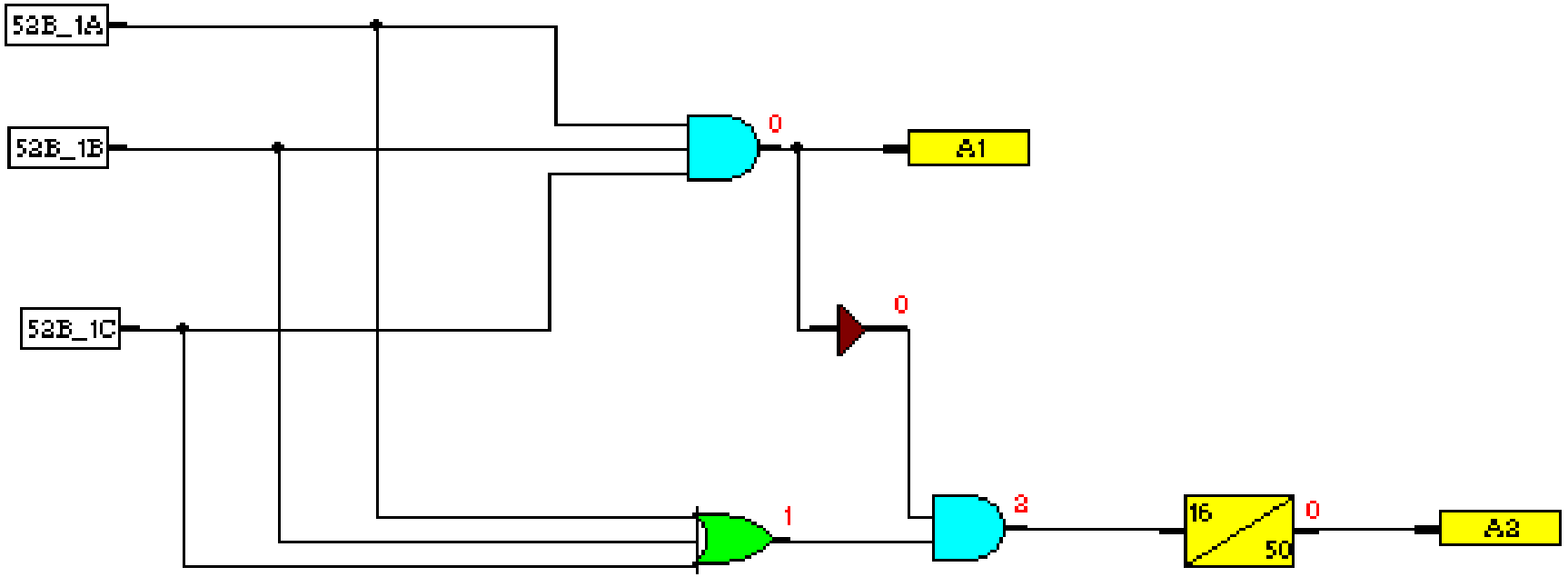

Recloser (Optional)

- Single breaker reclosing
- Programmable up to 4 reclose attempts
- Optional synch check/voltage supervision

Local Interface

- Multi-line 20 character LCD display for settings, fault data (faulted phases, trip type, fault location) and metering data
- 2 LED's - one to indicate system status, one to indicate unacknowledged trip data
- Full keypad standard

Password Protection

REMOTE	KEYPAD
VIEW	SETTING
SETTING	NONE or CONTROL
CONTROL	MASTER
MASTER	

ASCII Command List (1 of 2)

- LOGIN
- QUIT
- PASSWORD
- VALUES
- READINGS
- FAULT
- EVENTS
- OPEN
- CLOSE
- ENOUT
- DISOUT
- STATUS
- SHOWSET
- SET
- MODEL
- DATE

ASCII Command List (2 of 2)

- TIME
- GROUP
- TRIGGER
- RELTEST
- MMIPASS
- UNITID
- STLINID
- DIGTST
- REQTOC
- PLAYBACK
- DATARESET
- OUTPUTS
- INPUTS
- ACCESS
- END
- HELP

Oscillography Data

- 64 sample per cycle data including:
  - Currents & voltages
  - Contact input & output status
  - Internal sequence of events
- Flexible triggering & event storage
  - 2 events at 72 cycles to 16 events at 9 cycles
- Optional additional memory
- Files may be stored in COMTRADE format

Oscillography Data Playback

The ALPS relay has the ability to replay stored oscillography data. The data must be in the ALPS data format. The data may be fault data stored in the relay, or downloaded data stored on a PC.

The digital data is run through the ALPS protection algorithms.

Support Software

ALPS-LINK: Windows based GEmodem communications

ALPS-SET: Windows based settings calculations and file creation

ALPS-TEST: Windows based test quantity calculation

Xpression Builder: Windows based programmable logic design

GE-DATA: Oscillography data analysis

Upgrade Features

- Flash memory allows firmware upgrades without changing relay hardware
- Plug-in communications module allows for upgrade to future communications protocols

I/O Summary

Inputs:

- Current:
  - Ia, Ib, Ic
- Voltage:
  - Vag, Vbg, Vcg, optional Vsynch
- Digital Inputs:
  - 8 programmable for three phase tripping
  - 12 programmable for single phase tripping
- Demodulated IRIG-B

I/O Summary

Outputs:

18 programmable contacts for three phase trip
24 programmable contacts for single phase trip
2 alarm contacts
(Power Supply and Critical Failure Alarms)
Analog distance to fault (SCADA)

Packaging

- Vertical or horizontal mounting
- 3RU 19 inch rack mount
- 5.25 X 17.25 vertical mount - Sized to fit the cutout of popular EM distance relays
- Reversible mounting flanges
- All boards may be removed from the front of the case

Packaging

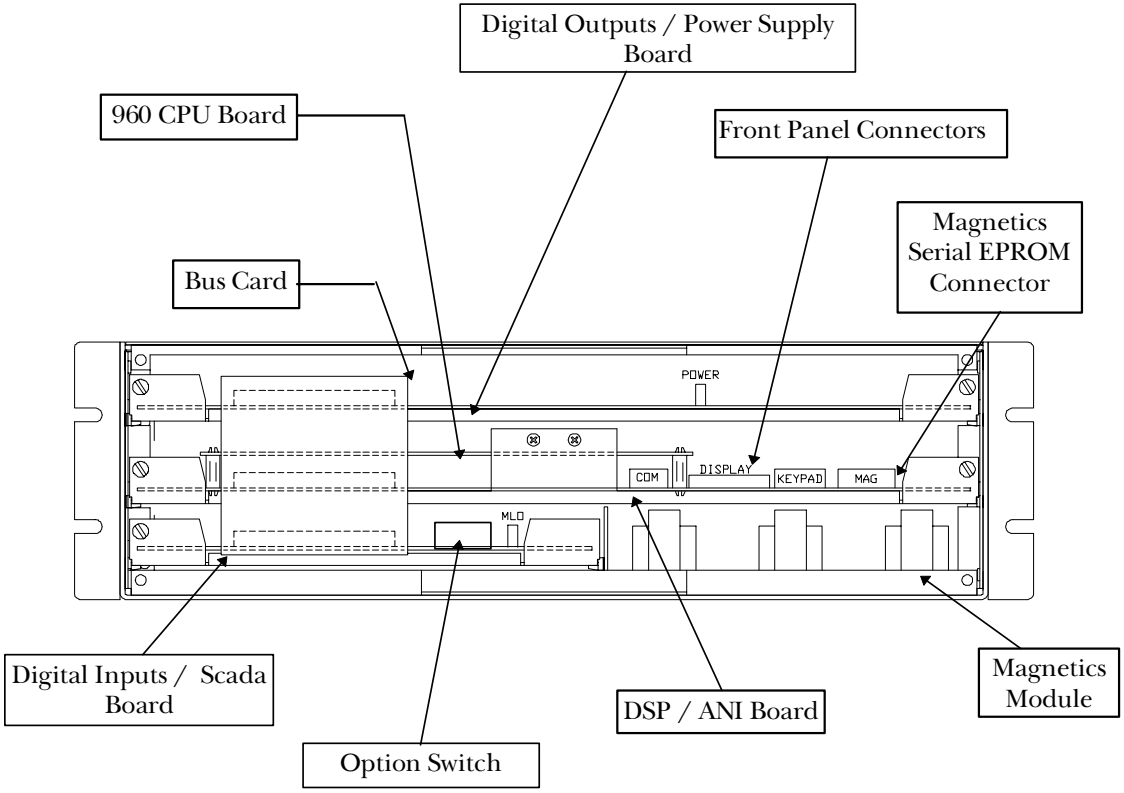
Digital Outputs / Power Supply Board
960 CPU Board
Front Panel Connectors
Magnetics Serial EPROM Connector
Bus Card
POWER
COM
DISPLAY
KEYPAD
MAG
MLO
Digital Inputs / Scada Board
Option Switch
DSP / ANI Board
Magnetics Module

Contact Ratings

- Trip
  - Trip Duty: 30 A for 1 second
  - Continuous Duty: 6 A
  - Pickup Time: < 4 ms
- Alarm
  - Make & Carry: 30 A for 1 second
  - Continuous Duty: 6 A
  - Pickup Time: < 8 ms
- Channel Control
  - Power Rating: 10 W
  - Pickup Time: < 0.5 ms

AC Ratings

- Current Inputs (Nominal 1 or 5A):
  - 3 X rated continuous
  - 100 X rated for one second
  - 50 X rated for 3 seconds
- Voltage Inputs:
  - Nominal Voltage: 100 - 120 (Settable)
  - 1.2 X rated continuous
  - 3.5 X rated for one minute, once per hour

DC Ratings

- Three models

  48 VDC (38.5 - 60.0)

  110/125 VDC (88 - 150)

  220/250 VDC (176 - 300)

Summary of ALPS Features

- High Speed Tripping for Severe Faults
- Model for Series Compensated Lines
- Extensive Programmable Logic and Flexible I/O
- Out of Step Tripping and Extended Oscillography
- Flash Memory
- Full ASCII Communications
- RS485 & Plug in Communication Card
- Playback

ALPS* * * * * * * * * * * *

D	Distance Relay
A	Revision Level
1	Single phase tripping logic
3	Three phase tripping logic
1	1 Ampere rated current
5	5 Ampere rated current
U	For applications without Series Capacitors
C	For applications with Series Capacitors
0	48 VDC battery voltage
1	110/125 VDC battery voltage
2	220/250 VDC battery voltage
1	SCR trip outputs & contact channel interface
2	Contact trip outputs & contact chan nel interface
3	SCR trip outputs & 5V/20mA channel interface
4	Contact trip outputs & 5V/20mA channel interface
2	Front RS232 com port & 1 settable RS232/RS485 rear port (GE-Modem/ASCII)
3	Front RS232 com port & 2 settable RS232/RS485 rear ports (GE-Modem/ASCII)
H	Horizontal mounting
V	Vertical mounting
S	Standard Oscillography Memory
E	Extended Oscillography Memory
0	No Out of Step Tripping or Positive Sequence Overvoltage
1	With Out of Step Tripping
2	With Positive Sequence Overvoltage units
3	With Positive Sequence Overvoltage units & Out of Step Tripping
N	No recloser
R	Recloser without sync-check option
S	Recloser with synch-check option

ALPS Selection Guide

EXAMPLE: ALPSDA35U122VE1N = ALPS Digital Line Protection Distance Relay, Revision A, three phase tripping relay, rated at 5 amperes, Without series capacitor protection, 110/125 VDC supply, contact tripping outputs, 2 communications ports, vertical mounting, with extended memory, without OST functions, and without recloser.