SIZE	DRAWING NO.	REV	SHEET
D	898409	A2	1

GE PROPRIETARY AND CONFIDENTIAL INFORMATION

This document is the property of General Electric Company ("GE") and contains proprietary information of GE. This document is loaned on the express condition that neither it nor the information contained therein shall be disclosed to others without the express written consent of GE Industrial Systems, and that the information shall be used by the recipient only as approved expressly by GE Industrial Systems. This document shall be returned to GE upon its request. This document may be subject to certain restrictions under U.S. export control laws and regulations.

REVISIONS

REV.	DATE	ECO#	DWN	APP	DESCRIPTION
A2	12/10/ 2011	11-2849	A.Z	P.S	SEE ECO 11-2849 FOR DETAILS

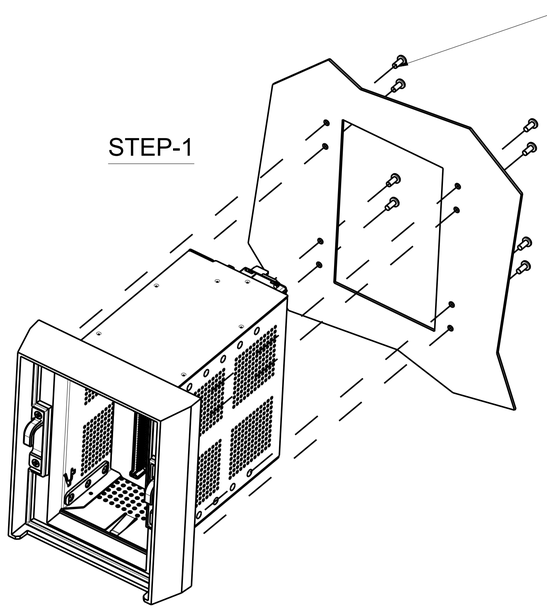

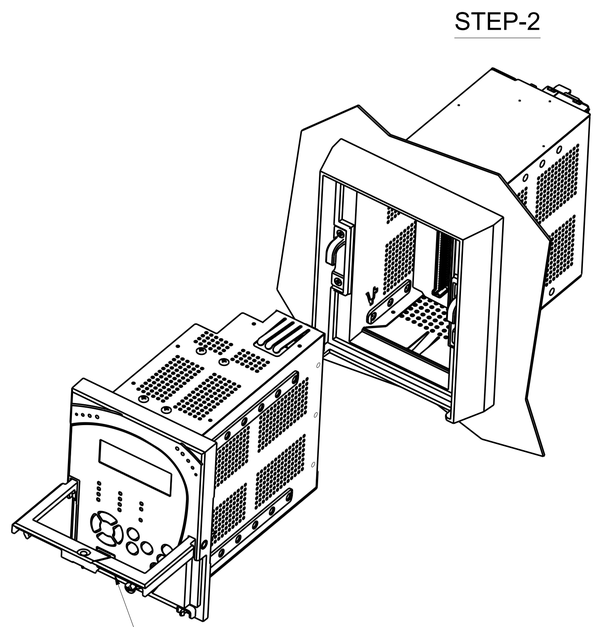

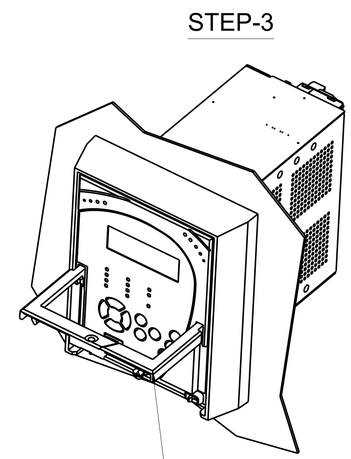

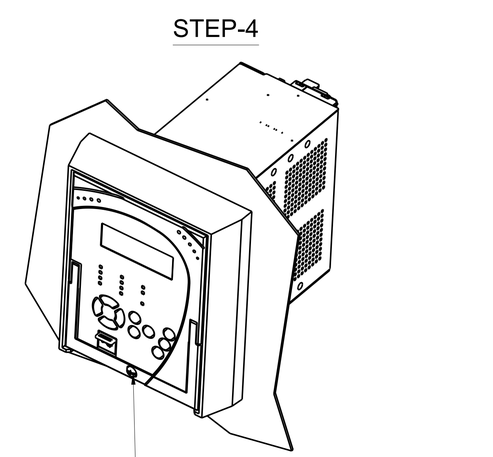

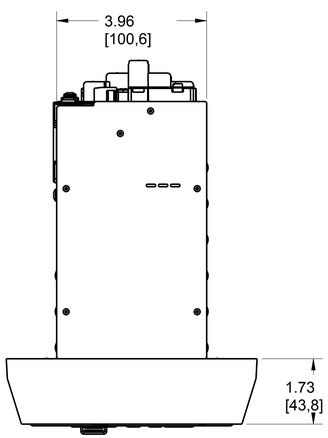

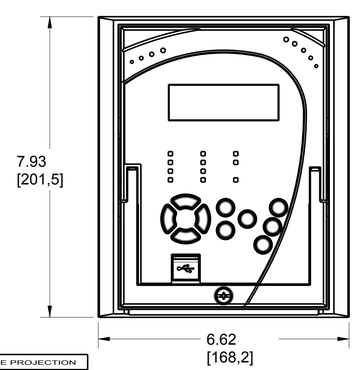

SCALE 0.500

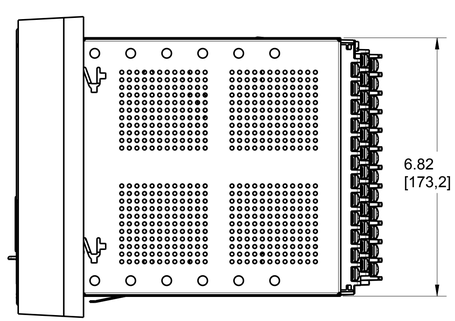

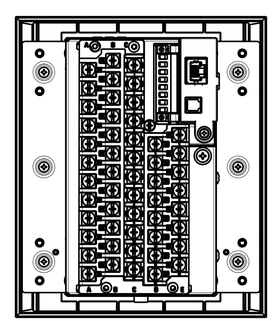

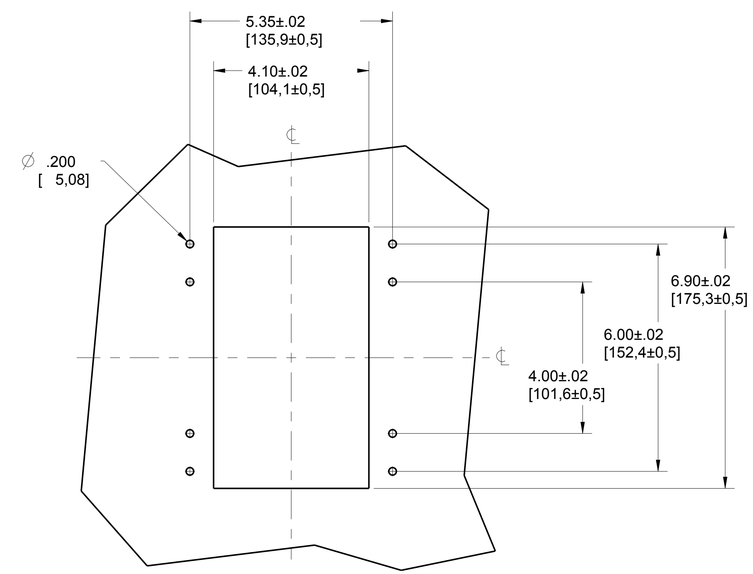

PANEL CUT-OUT DIMNESIONS

SCALE 0.500

THIRD ANGLE PROJECTION

TITLE	DWG No.
REFERENCE DRAWINGS	

FOR ADDITIONAL INFO REFER TO:
APPLIED PRACTICES

DIMENSIONS ARE IN INCHES

UNLESS OTHERWISE SPECIFIED IN DRAWING

TOLERANCE ON:
1 PL DECIMALS ± 0.0
2 PL DECIMALS ± 0.01
3 PL DECIMALS ± 0.005
ANGLES ± 1.0
FRACTIONS ±
FINISH

CRITICAL TO QUALITY CHARACTERISTIC

SIGNATURES		DATE
MODEL	H.T.	10/08/08
DETAIL	H.T.	10/08/08
CHECKED	H.T.	10/08/08

WHERE USED:

DRAWING FILE: 898409
FILE LOCATION: X:\DRAFTING\ProE Models
SOFTWARE TOOL: Pro/ENGINEER

Digital Energy
Multilin

215 ANDERSON AVE.
MARKHAM, ON, CANADA, L6E 1B3

TEL: (905)294-6222 FAX:(905)201-2098
INTERNET: http://www.GEIndustrial.com/pm

XR MANUAL DRAWING

SIZE	DRAWING	REV
D	898409	A2

SCALE: 0.400 | PART No: NA | SHEET 1 OF 2

SIZE	DRAWING NO.	REV	SHEET
D	898409	A2	2

GE PROPRIETARY AND CONFIDENTIAL INFORMATION

This document is the property of General Electric Company ("GE") and contains proprietary information of GE. This document is loaned on the express condition that neither it nor the information contained therein shall be disclosed to others without the express written consent of GE Digital Energy, and that the information shall be used by the recipient only as approved expressly by GE Digital Energy. This document shall be returned to GE upon its request. This document may be subject to certain restrictions under U.S. export control laws and regulations.

REVISIONS

REV.	DATE	ECO#	DWN	APP	DESCRIPTION
A2	28JAN2014	11-2849	A.Z	P.S	SEE ECO 11-2849 FOR DETAILS

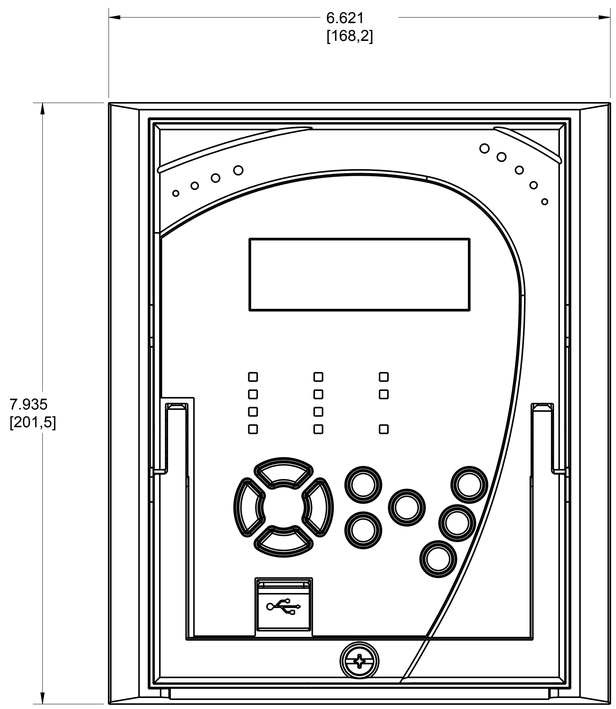

FRONT PANEL

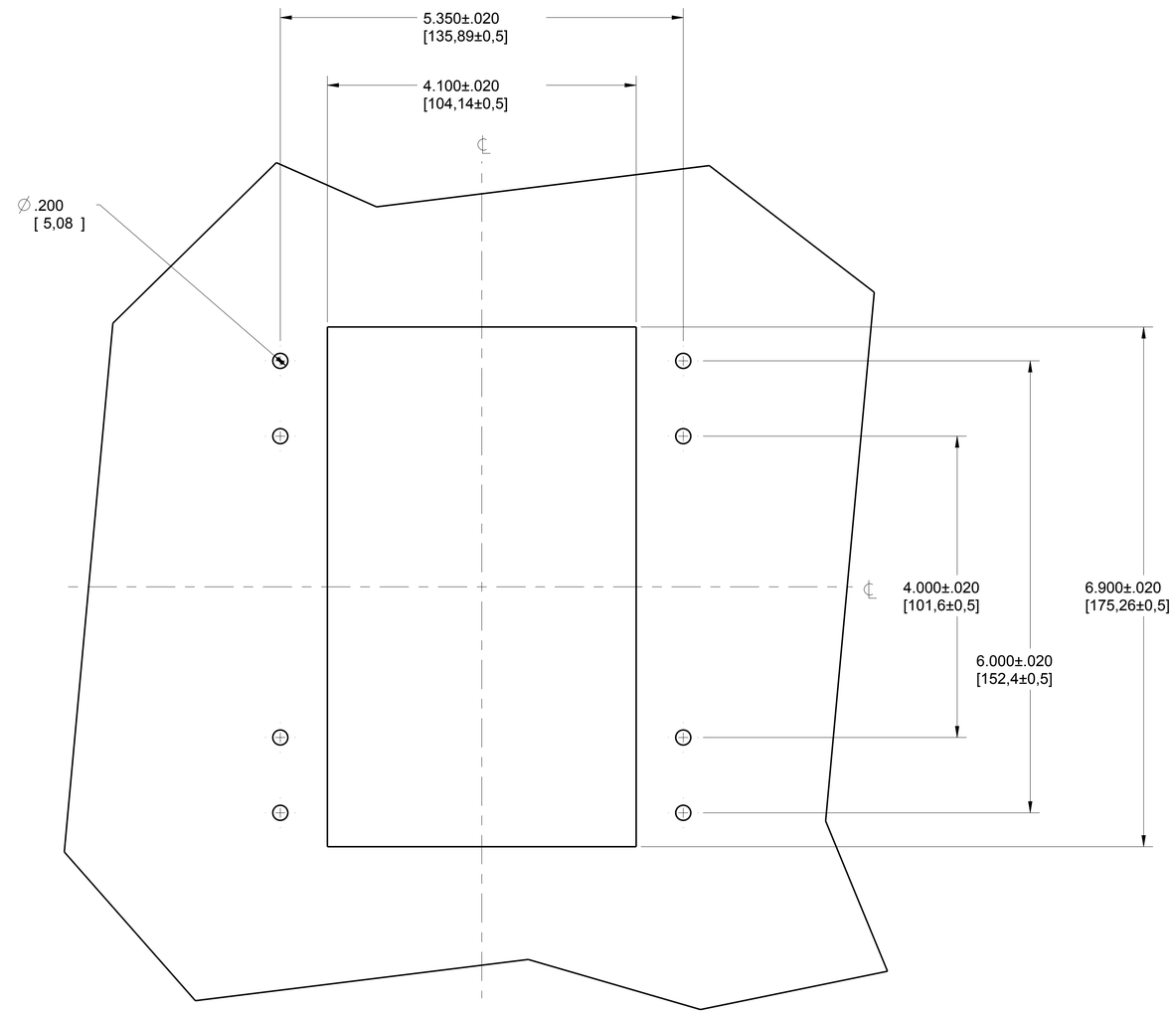

PANEL CUT-OUT DIMENSIONS

THIRD ANGLE PROJECTION

TITLE	DWG No.
REFERENCE DRAWINGS	

FOR ADDITIONAL INFO REFER TO:
APPLIED PRACTICES

DIMENSIONS ARE IN INCHES

UNLESS OTHERWISE SPECIFIED IN DRAWING

TOLERANCE ON:
1 PL DECIMALS ± 0.0
2 PL DECIMALS ± 0.01
3 PL DECIMALS ± 0.005
ANGLES ± 1.0
FRACTIONS ±
FINISH

CRITICAL TO QUALITY CHARACTERISTIC

SIGNATURES		DATE
MODEL	H.T.	10/08/08
DETAIL	H.T.	10/08/08
CHECKED	H.T.	10/08/08

WHERE USED:

DRAWING FILE: 898409
FILE LOCATION: X:\DRAFTING\PvE Models
SOFTWARE TOOL: Pro/ENGINEER

Digital Energy
Multilin

215 ANDERSON AVE
MARKHAM, ON, CANADA, L6E 1B3

TEL: (905)294-6222 FAX: (905)201-2098
INTERNET:http://www.gedigitalenergy.com/multilin/

XR MANUAL DRAWING

SIZE	DRAWING	REV
D	898409	A2

SCALE: 1.000 | PART No: NA | SHEET 2 OF 2