GE
Grid Solutions

Multilin F35

Cost-effective Protection & Control for Single/Multiple Distribution Feeders

The Multilin™ F35 feeder protection system provides feeder protection, control, monitoring and metering in an integrated, economical, and compact package. As part of the Universal Relay (UR) Family, the F35 provides cost-effective solutions and features high-performance protection, expandable I/O options, integrated monitoring and metering, high-speed communications, and extensive programming and configuration capabilities.

The F35 can be configured to protect up to six feeders or protect up to five feeders when bus voltage measurement is required. It also provides fast and deterministic execution of programmable logic, which is necessary for substation automation applications. Graphical programming tools (Viewpoint Engineer), supported by a library of logic components, make the F35 simple to use and configure.

Key Benefits

- Flexible and cost-effective protection and control for multiple distribution feeders backed by many years of field experience
- Advanced, high speed communications provide increased system stability at a reduced cost using control schemes
- Reduced relay-to-relay wiring and associated installation costs through high-speed inter-relay communications
- An integrated large, full color display, provides real-time visualization and control of the protected bay, via a bay mimic as well as annunciator functionality and graphical visualization of phasors
- Advanced IEC 61850 Ed. 1 and Ed. 2 certified implementation, complete settings via SCL files and IEC 61850-9-2 process bus solution ensures interoperability, device managing optimization and reduced cost of ownership
- Routable GOOSE (R-GOOSE) enables GOOSE messages going beyond the substation, which enables wide area protection and control applications
- Increased network availability via failover time reduced to zero through IEC® 62439-3 "PRP" support
- Supports latest edition of waveform capture (COMTRADE 2013) simplifying fault records management

Applications

- Primary protection and control for multiple distribution feeders
- Distribution load shedding schemes based on voltage and frequency elements
- Busblocking/interlocking schemes
- Throw over schemes (bus transfer scheme applications)
- Backup protection for transmission lines, feeders and transformers
- Distributed Generation (DG) interconnect protection, including active and passive anti-islanding

Protection & Control

- Instantaneous and time phase, neutral, negative sequence and ground overcurrent protection
- Neutral & auxiliary overvoltage, phase & auxiliary undervoltage, under frequency
- Wattmetric ground fault detection, breaker control, and breaker failure
- Four-shot autorecloser for up to 6 brekaers and broken conductor elements
- Protection and control functionality in one box, reducing the number of devices
- High density inputs/outputs to support the control of many switchyard assets – all from one powerful device
- Integrated large, full color display, for real-time visualization and control of the protected bay

Advanced Communications

- 3 independent Ethernet ports for simultaneous & dedicated network connections with IEEE 1588 support
- IEC 61850-9-2 process bus support

Cyber Security

- CyberSentry™ provides high-end cyber security aligned to industry standards and services (NERC® CIP, AAA, Radius, RBAC, Syslog)

Monitoring & Metering

- Advanced recording capabilities with high-capacity event recorder, configurable and extended waveform capture and data logger
- Metering: current, voltage, power, energy, frequency, and harmonics
- Phasor and customized metering screens available via Graphical Front Panel

imagination at work

Protection and Control

As part of the Universal Relay (UR) Family, the F35 provides cost-effective solutions and features high-performance protection, expandable I/O options, integrated monitoring and metering, high-speed communications, and extensive programming and configuration capabilities including:

Overcurrent Protection

The F35 has built-in standard IEEE, IEC, IAC and FlexCurves overcurrent characteristics (TOC), most commonly used for primary and backup protection in various protective zones. The F35 has thermal overload and phase IOC elements with level detectors for each phase. Each TOC element has the following programmable characteristics:

- Pickup current level for trip, alarm, or control
- Choice of 17 curve shapes (including FlexCurves) and curve multipliers

F35 - Protection, Metering, Monitoring and Control

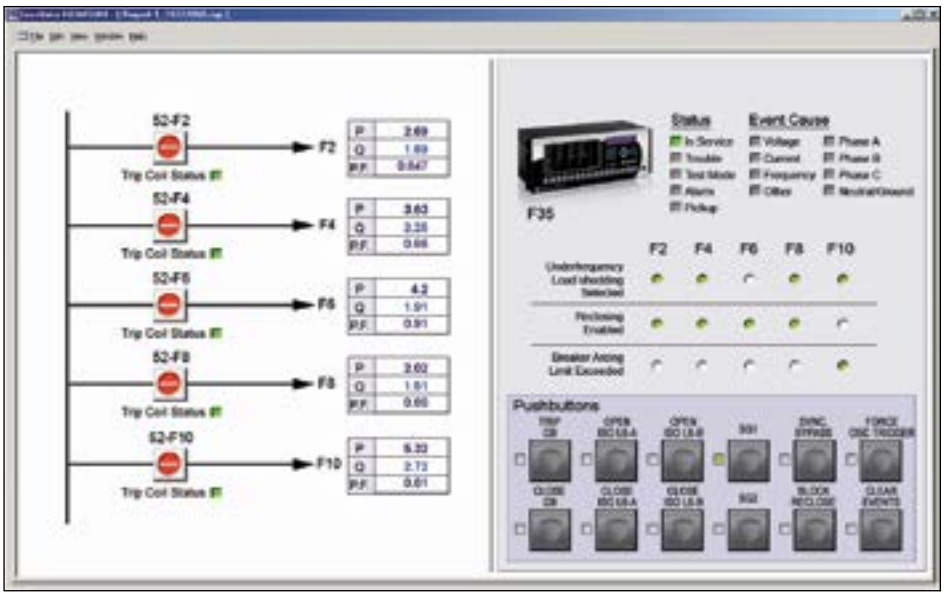

The F35 is the single point for protection, control, metering, and monitoring in one integrated device that can easily be connected directly into DCS or SCADA monitoring and control systems like Viewpoint Monitoring as shown.

Functional Block Diagram

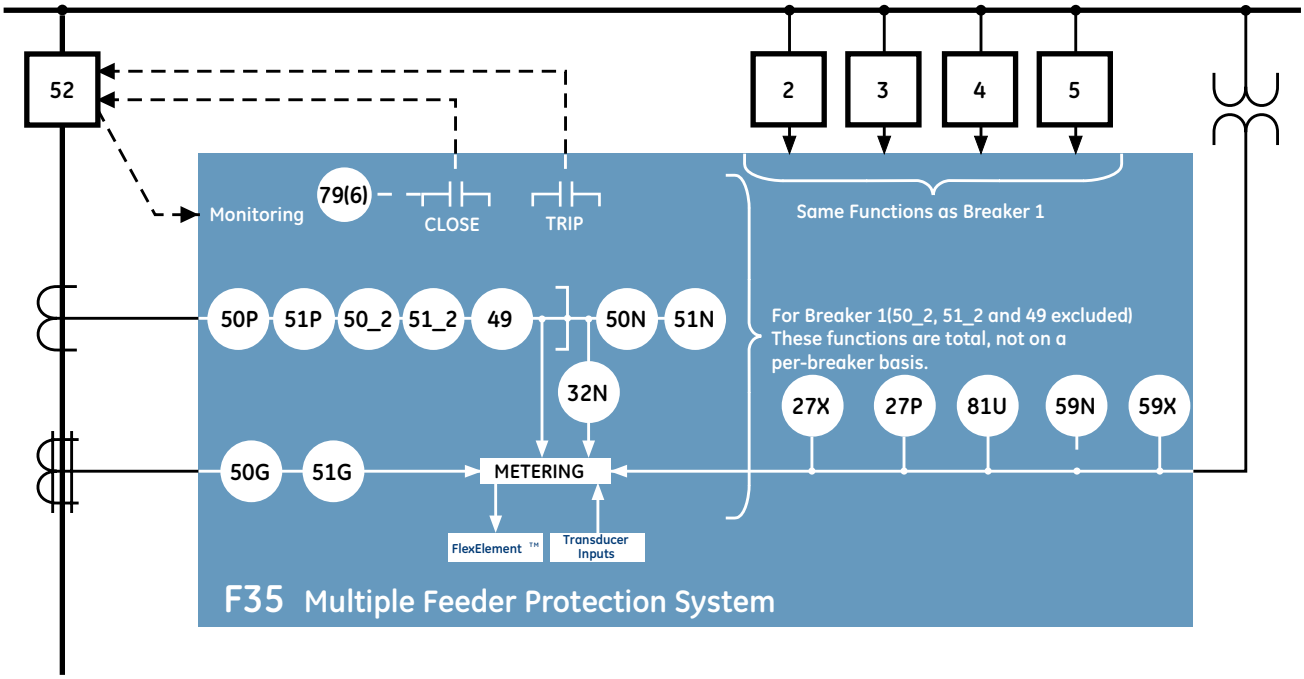

ANSI® Device Numbers & Functions

DEVICE NUMBER	FUNCTION
27P	Phase Undervoltage
27X	Auxiliary Undervoltage
32N	Wattmettric Zero-Sequence Directional
49	Thermal Overload
50G	Ground Instantaneous Overcurrent
50N	Neutral Instantaneous Overcurrent

DEVICE NUMBER	FUNCTION
50P	Phase Instantaneous Overcurrent
50_2	Negative Sequence Instantaneous Overcurrent
51G	Ground Time Overcurrent
51N	Neutral Time Overcurrent
51P	Phase Time Overcurrent
51_2	Negative Sequence Time Overcurrent

DEVICE NUMBER	FUNCTION
52	AC Circuit Breaker
59N	Neutral Overvoltage
59X	Auxiliary Overvoltage
79(6)	Automatic Recloser
81	Under Frequency

Auto-Transfer Scheme Solution

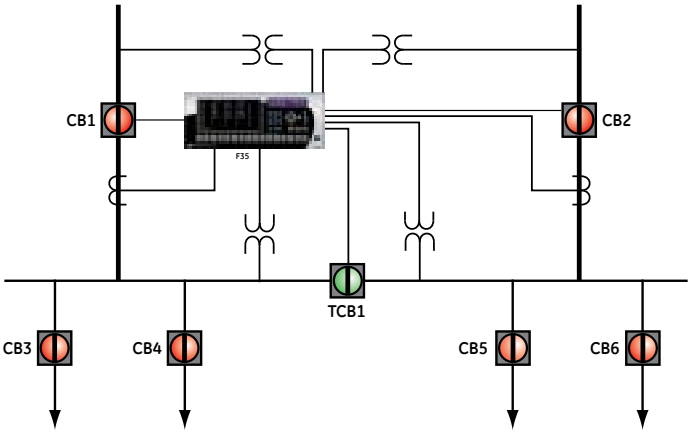

Cost-effective single box auto-transfer scheme solution.

- Instantaneous or linear reset time characteristic to coordinate with upstream transformer damage curves and downstream reclosers and fuses
- Voltage restraint to increase sensitivity

The majority of distribution systems are either solidly or low-impedance grounded. Fast fault clearance is required due to the ground fault impact. The following functions are incorporated in F35 to provide ground protection:

- Neutral IOC and TOC
- Ground IOC and TOC
- Negative Sequence IOC and TOC

Sensitive Ground Input

The F35 CT/VT modules may be ordered with a sensitive ground current input, which provides ground fault protection on high-impedance grounded systems. This can be especially important when using a residual CT connection to detect ground faults.

Wattmetric Ground Fault Protection

A sensitive wattmetric zero-sequence directional function can be used on isolated or resonant (Petersen coil) grounded, low-resistance grounded and solidly grounded systems to detect ground faults.

This function determines the presence and direction of ground faults by measuring the value and direction of zero-sequence power. This flexible element responds to power derived from zero-sequence voltage and current in a direction specified by the element characteristic angle. Power can be selected as active, reactive, or apparent. Therefore, the element may be used to sense either forward or reverse ground faults.

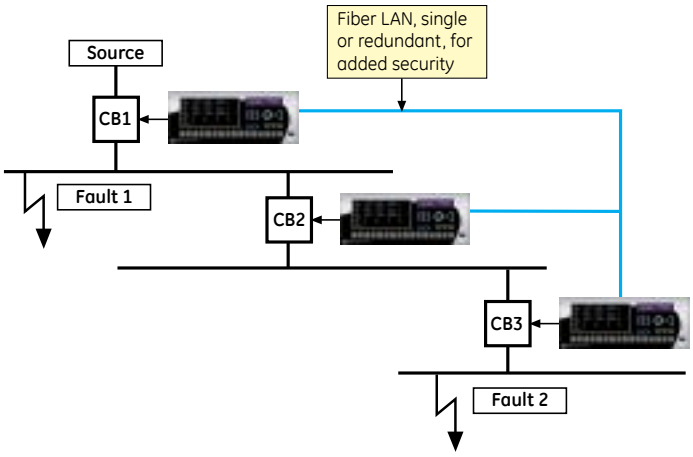

Reverse zone interlocking protection. By using the IEC 61850 GOOSE or high-speed direct I/O capability blocking signals can be transferred upstream, allowing for minimal coordination delays. Fast clearance can be provided for Fault 1 while still maintaining coordination for Fault 2.

Under/Over Voltage Protection

The F35 includes the following voltage elements:

- Up to 6 phase undervoltage elements
- Up to 3 auxiliary under/over voltage elements
- Up to 3 neutral overvoltage elements

The following are some of the key applications where voltage elements can be used:

- Source transfer schemes
- Load shedding schemes
- Backup capacitor bank protection and control
- Backup motor protection to prevent automatic restart

Autorecloser

Up to 6 programmable breaker autoreclosers for a variety of reclosing practices are provided. These elements are intended for use with distribution lines in tripping schemes for single breaker applications. Up to four selectable recloser "shots" are possible prior to locking out. Any of the six autoreclose elements can be dynamically blocked or unblocked by other F35 elements or user logic, providing coordination with other protection setting groups.

IEC 61850 Process Bus

The IEC 61850 Process Bus module is designed to interface with the Multilin HardFiber System, allowing bi-directional IEC 61850 fiber optic communications. The HardFiber System is designed to integrate seamlessly with existing UR applications, including protection functions, FlexLogic™, metering and communications.

The Multilin HardFiber System offers the following benefits:

- Communicates using open standard IEC 61850 messaging
- Drastically reduces P&C design, installation and testing labor by eliminating individual copper terminations
- Integrates with existing F35's by replacing traditional CT/VT inputs with the IEC 61850 Process Bus module
- Does not introduce new cyber security concerns

Visit the HardFiber System product page on the GE Grid Solutions web site for more details.

Advanced Automation

The F35 incorporates advanced automation features including powerful FlexLogic programmable logic, communication, and SCADA capabilities that far surpass what is found in the average line relay. The F35 integrates seamlessly with other UR relays for complete system protection, including the unit and auxiliary transformers, and balance of plant protection.

FlexLogic

FlexLogic is the powerful UR-platform programming logic engine that provides the ability to create customized protection and control schemes, minimizing the need and associated costs of auxiliary components and wiring. With 1024 lines of FlexLogic, the F35 can be programmed to provide the required tripping logic along with custom scheme logic for line phase comparison (including interlocking with external synchronizers), transfer tripping schemes for remote breakers and dynamic setting group changes.

Scalable Hardware

The F35 is available with a multitude of I/O configurations to suit the most demanding application needs. The expandable modular design allows for easy configuration and future upgrades.

- Multiple CT/VT configurations allow for the implementation of many differential schemes, including concurrent split-phase and differential protection
- Up to 80 digital inputs and up to 56 digital outputs are available
- Types of digital outputs include trip-rated Form-A and Solid State Relay (SSR) mechanically latching, and Form-C outputs
- Form-A and SSR outputs available with optional circuit continuity monitoring and current detection to verify proper operation of the connected primary equipment
- Mechanically latching outputs can be used to develop secure interlocking applications and replace electromechanical lockout relays
- RTDs and DCmA inputs are available to monitor equipment parameters such as temperature and pressure

Monitoring and Metering

The F35 includes high accuracy metering and recording for all AC signals. Voltage, current, and power metering are built into the relay as a standard feature. Current and voltage parameters are available as total RMS magnitude, and as fundamental frequency magnitude and angle.

Fault and Disturbance Recording

The advanced disturbance and event recording features within the F35 can significantly reduce the time needed for postmortem analysis of power system events and the creation of regulatory reports. Recording functions include:

- Sequence of Event (SOE)
  - 1024 time stamped events
  - Events up to 45s in length
- Oscillography
  - Supports IEEE C37.111-1999/2013, IEC 60255-24 Ed 2.0 COMTRADE standard
  - 64 digital & up to 40 analog channels
- Data Logger and Disturbance Recording
  - 16 channels up to 1 sample/cycle/channel
- Fault Reports
  - Powerful summary report of pre-fault and fault values

The very high sampling rates and large amount of storage space available for data recording in the F35 can eliminate the need for installing costly stand-alone recording equipment.

Advanced Device Health Diagnostics

The F35 performs comprehensive device health diagnostic tests at startup and continuously during run-time to test its own major functions and critical hardware. These diagnostic tests monitor for conditions that could impact security and availability of protection, and present device status via SCADA communications and front panel display. Providing continuous monitoring and early detection of possible issues help improve system uptime.

Power System Troubleshooting

The F35 contains many tools and reports that simplify and reduce the amount of time required for troubleshooting power system events.

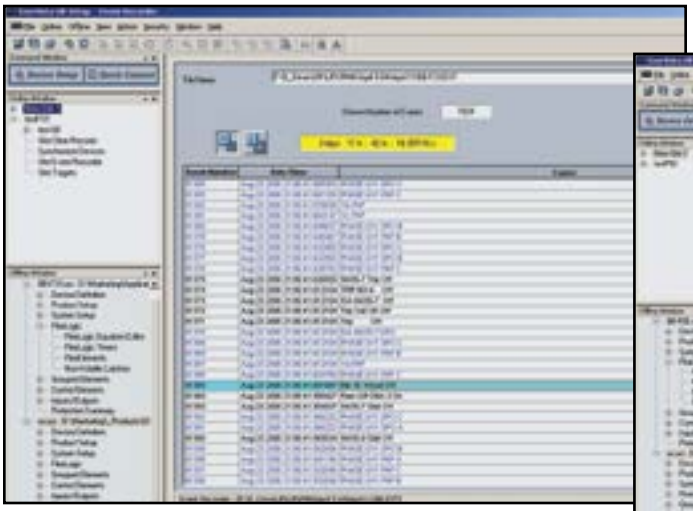

Record the operation of the internal F35 elements and external connected devices with 1ms time-stamped accuracy to identify the Sequence of Operation of station devices during feeder faults and disturbances.

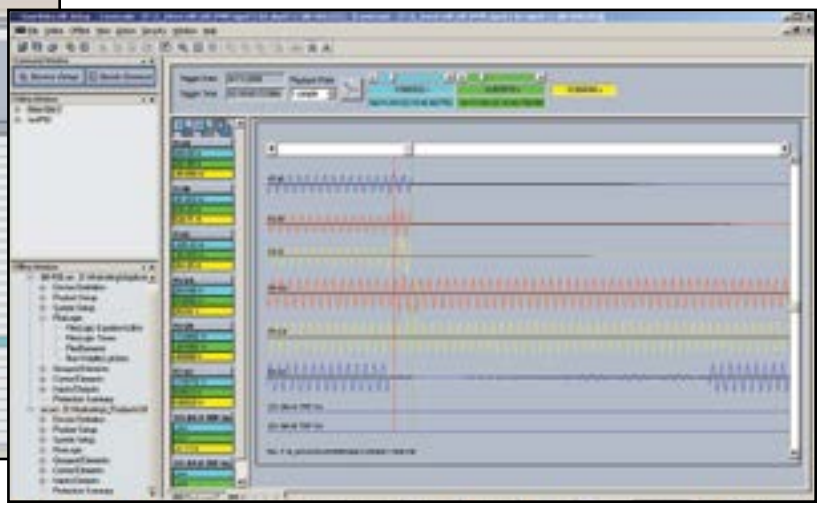

Analyze feeder faults using both analog and digital power system quantities that are measured and recorded up to a rate of 64 samples per cycle.

- Comprehensive device health diagnostic performed at startup
- Monitors the CT/VT input circuitry to validate the integrity of all signals
- Input, outputs, trip circuits and analog channels are continuously monitored for accuracy and performance

Cyber Security – CyberSentry UR

CyberSentry UR enabled UR devices deliver full cyber security features that help customers to comply with NERC CIP and NIST® IR 7628 cyber security requirements.

This software option delivers the following core features:

AAA Server Support (Radius/LDAP)

Enables integration with centrally managed authentication and accounting of all user activities and uses modern industry best practices and standards that meet and exceed NERC CIP requirements for authentication and password management.

Role Based Access Control (RBAC)

Efficiently administrate users and roles within UR devices. The new and advanced access functions allow users to configure up to five roles for up to eight configurable users with independent passwords. The standard "Remote Authentication Dial In User Service" (Radius) is used for authentication.

Event Recorder (Syslog for SEM)

Capture all cyber security related events within a SOE element (login, logout, invalid password attempts, remote/local access, user in session, settings change, FW update, etc), and then serve and classify data by security level using standard Syslog data format. This will enable integration with established SEM (Security Event Management) systems.

Communications

The F35 provides advanced commun-ications technologies for remote data and engineering access, making it the easiest and most flexible feeder protection relay to use and integrate into new and existing infrastructures. Direct support for fiber optic Ethernet provides high-bandwidth communications allowing for low-latency controls and high-speed file transfers of relay fault and event record information. The available three independent Ethernet ports, redundant Ethernet option and the embedded managed Ethernet switch provide the means to create fault tolerant communication architectures in an easy, cost-effective manner without the need for intermediary communication hardware.

The F35 supports the most popular industry standard protocols enabling easy, direct integration into DCS and SCADA systems.

- IEC 61850 Ed. 1 and Ed. 2 with 61850-9-2 and 61850-90-5 support
- DNP 3.0 (serial & TCP/IP)
- Ethernet Global Data (EGD)
- IEC 60870-5-103 and IEC 60870-5-104
- Modbus RTU, Modbus TCP/IP
- HTTP, TFTP, SFTP and MMS file transfer
- IEEE1588 and redundant SNTP for time synchronization
- PRP as per IEC 62439-3
- Supports Routable GOOSE (R-GOOSE)

Interoperability with Embedded IEC 61850 Ed. 1 and Ed. 2

The new IEC 61850 implementation in the UR Family positions GE as an industry leader in this standard.

- Implements, user selectable, Ed. 1 and Ed. 2 of the standard across the entire UR Family
- Provides full relay setting management via standard SCL files (ICD, CID and IID)
- Enable automated relay setting management using 3rd party tools through standard file transfer services (MMS and SFTP)
- Increases the number of Logical Devices and data mapped to them, GOOSE messages from up to 64 remote devices, and reports to support different organizational needs for data transfer and reduce dependency on generic logical nodes
- Configure GE Systems based on IEC 61850 using universal 3rd party tools
- R-GOOSE enable customer to send GOOSE messages beyond the substation, which enables WAPC and more cost effective communication architectures for wide area applications

Direct I/O Messaging

Direct I/O allows for the sharing of high-speed digital information between multiple UR relays via direct back-to-back connections or multiplexed through a standard DS0 multiplexer channel bank. Regardless of the connection method, direct I/O provides continuous real-time channel monitoring that supplies diagnostics information on channel health. Direct I/O provides superior relay-to-relay communications that can be used in advanced interlocking, generation rejection and other special protection schemes.

Communication with up to 16 UR relays in single or redundant rings rather than simplistic point-to-point configurations

- Connect to standard DS0 channel banks through standard RS422, G.703 or IEEE C37.94 interfaces or via direct fiber optic connections
- Built-in continuous loop and channel monitoring provides real-time diagnostics of your communication channels with no external or handheld tester required

LAN Redundancy

Substation LAN redundancy has been traditionally accomplished by reconfiguring the active network topology in case of failure. Regardless of the type of LAN architecture (tree, mesh, etc), reconfiguring the active LAN requires time to switchover, during which the LAN is unavailable. UR devices deliver redundancy as specified by PRP-IEC 62439-3, which eliminates the dependency on LAN reconfiguration and the associated switchover time. The UR becomes a dual attached node that transmits data packets over both main and redundant networks simultaneously, so in case of failure, one of the data packets will reach the receiving device with no time delay.

Multi-Language

UR devices support multiple languages: English, French, Russian, Chinese, Turkish, German, Polish and Japanese. These language options are available on the front panel, in the EnerVista setup software, and in the product manuals. Easily switch between English and an additional language on the local displays without uploading new firmware.

EnerVista Software

The EnerVista suite is an industry-leading set of software programs that simplifies every aspect of using the F35 relay. The EnerVista suite provides all the tools to monitor the status of feeders, maintain the relay, and integrate information measured by the F35 into DCS or SCADA monitoring systems. Convenient COMTRADE and SOE viewers are an integral part of the UR setup software included with every UR relay, to carry out postmortem event analysis and ensure proper protection system operation.

EnerVista Launchpad

EnerVista Launchpad is a powerful software package that provides users with all of the setup and support tools needed for configuring and maintaining Multilin products. The setup software within Launchpad allows for the configuration of devices in real-time by communicating using serial, Ethernet, or modem connections, or offline by creating setting files to be sent to devices at a later time. Included in Launchpad is a document archiving and management system that ensures critical documentation is up-to-date and available when needed. Documents made available include:

- Manuals
- Application Notes
- Guideform Specifications
- Brochures
- Wiring Diagrams
- FAQ's
- Service Bulletins

Viewpoint Monitoring

Viewpoint Monitoring is a simple-to-use and full-featured monitoring and data recording software package for small systems. Viewpoint Monitoring provides a complete HMI package with the following functionality:

- Plug-&-Play Device Monitoring
- System Single-Line Monitoring & Control
- Annunciator Alarm Screens
- Trending Reports
- Automatic Event Retrieval
- Automatic Waveform Retrieval

Viewpoint UR Engineer

Viewpoint UR Engineer is a set of powerful tools that will allows you to configure and test GE relays at a system level in an easy-to-use graphical drag-and-drop environment. Viewpoint UR Engineer provides the following configuration and commissioning utilities:

- Graphical Logic Designer
- Graphical System Designer
- Graphical Logic Monitor
- Graphical System Monitor

Viewpoint Maintenance

Viewpoint Maintenance provides tools that will create reports on the operating status of the relay, simplify the steps to download fault and event data, and reduce the work required for cyber security compliance audits. Tools available in Viewpoint Maintenance include:

- Settings Security Audit Report
- Device Health Report
- Single-Click Fault Data Retrieval

EnerVista Integrator

EnerVista Integrator is a toolkit that allows seamless integration of Multilin devices into new or existing automation systems. Included in EnerVista Integrator is:

- OPC/DDE Server
- Multilin Drivers
- Automatic Event Retrieval
- Automatic Waveform Retrieval

User Interface

The F35 front panel provides extensive local HMI capabilities. The local display is used for monitoring, status messaging, fault diagnosis, and device configuration. User-configurable messages that combine text with live data can be displayed when user-defined conditions are met.

A 7" color, graphic HMI is optionally available that allows users to have customizable bay diagrams with local monitoring of status, values and control functionality. The alarm annunciator panel provides the configuration of up to 96 signals (alarms and status) with full text description.

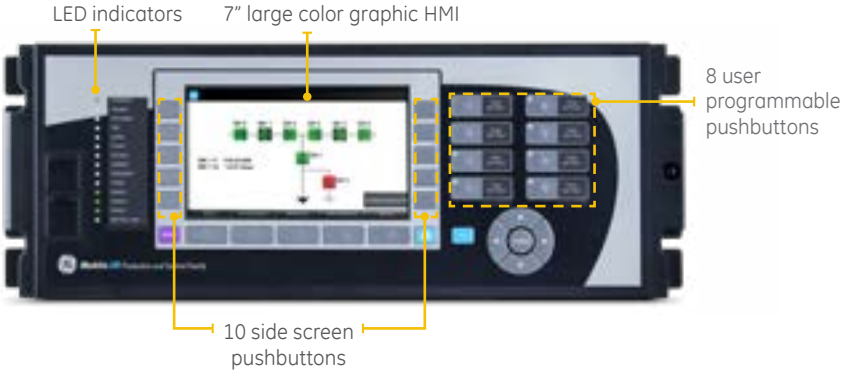

Typical Wiring

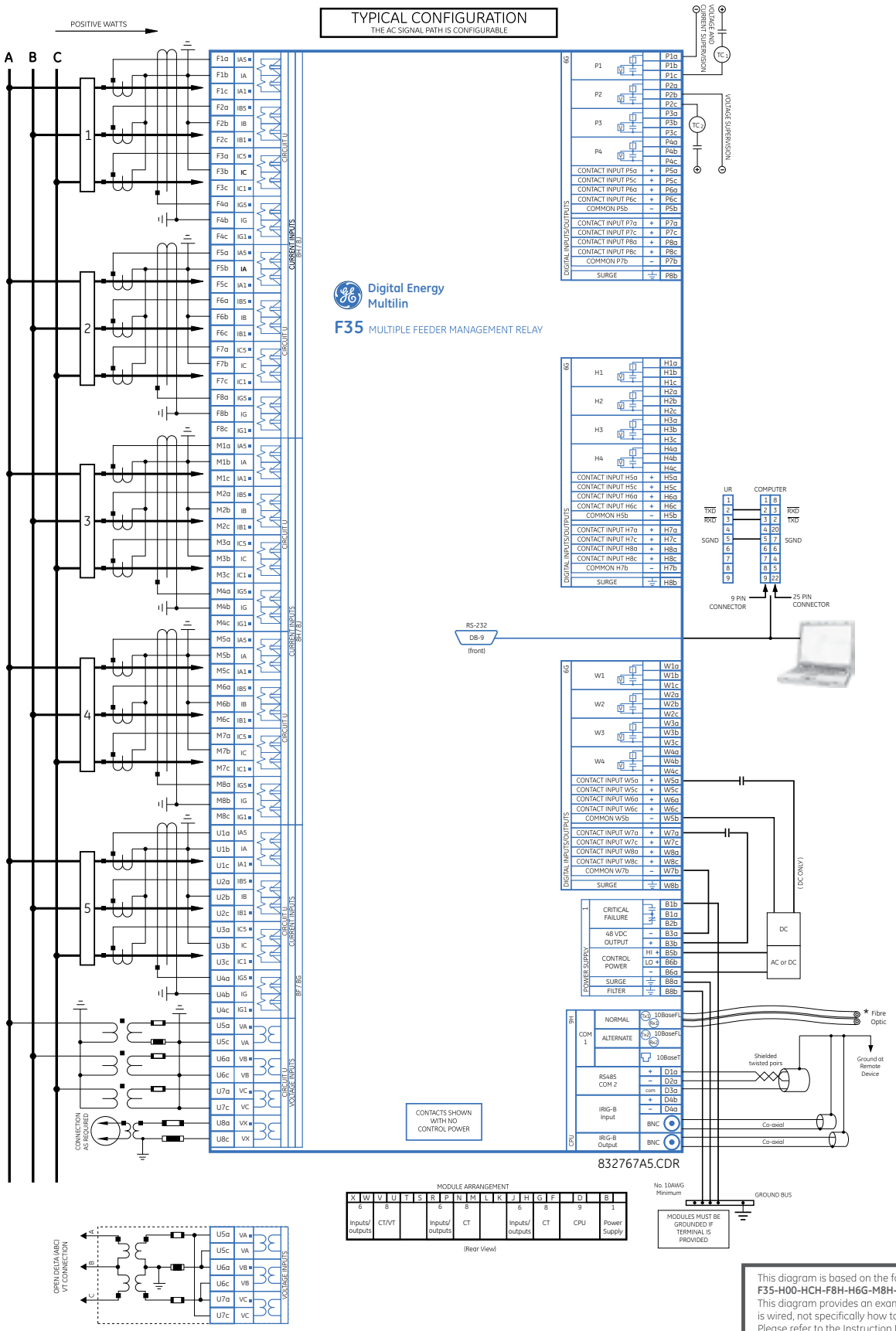

This diagram is based on the following order code:
F35-H00-HCH-F8H-H6G-M8H-P6G-U8F-W6G
This diagram provides an example of how the device is wired, not specifically how to wire the device. Please refer to the Instruction Manual for additional details on wiring based on various configurations.

Ordering

	F35 - * ** - H * * - F** - H** - M ** -P **- U ** - W *	For Full Sized Horizontal Mount
Base Unit	F35	Base Unit
CPU	E	RS485 + RS485 (IEC 61850 option not available)
	J	RS485 + multimode ST 100BaseFX
	K	RS485 + multimode ST Redundant 100BaseFX
	N	RS485 + 10/100 BaseT
	T	RS485 + three multimode SFP LC 100BaseFX. Req FW v7xx or higher
	U	RS485 + two multimode SFP LC 100BaseFX + one SFP RJ45 100BaseT. Req FW v7xx or higher
	V	RS485 + three SFP RJ45 100BaseT. Req FW v7xx or higher
	W	RS485 + two 100BaseFx Eth, Multimode ST + one 10/100BaseT Eth, RJ-45[3]
Software Options[1]	00	No Software Options
	03	IEC 61850
	A0	CyberSentry UR Lvl 1. Req UR FW 7.xx or higher
	B0	IEEE 1588. Req UR FW 7.xx or higher
	C0	PRP
	D0	IEEE 1588 + CyberSentry UR. Req UR FW 7.xx or higher
Mount / Coating	H	Horizontal (19" rack) - Standard
	A	Horizontal (19" rack) - Harsh Chemical Environment Option
	V	Vertical (3/4 size) - Standard
	B	Vertical (3/4 size) - Harsh Chemical Environment Option
User Interface	E	7" Graphical display, USB front port & programmable pushbuttons - Multi-Language (FW 7.6x or higher)
	F	Vertical Front Panel with English Display
	I	Enhanced German Front Panel
	J	Enhanced German Front Panel with User-Programmable Pushbuttons
	K	Enhanced English Front Panel
	L	Enhanced English Front Panel with User-Programmable Pushbuttons
	M	Enhanced French Front Panel
	N	Enhanced French Front Panel with User-Programmable Pushbuttons
	Q	Enhanced Russian Front Panel
	T	Enhanced Russian Front Panel with User-Programmable Pushbuttons
	U	Enhanced Chinese Front Panel
	V	Enhanced Chinese Front Panel with User-Programmable Pushbuttons
	W	Enhanced Turkish Front Panel
	Y	Enhanced Turkish Front Panel with User-Programmable Pushbuttons
	H	Enhanced Polish Front Panel[3]
	O	Enhanced Polish Front Panel with User-Programmable Pushbuttons[3]
	Z	Enhanced Japanese Front Panel[3]
	X	Enhanced Japanese Front Panel with User-Programmable Pushbuttons[3]
Power Supply[2]	H	125 / 250 V AC/DC
	H	125/250 V AC/DC with redundant 125/250 V AC/DC power supply (RH)
	L	24 - 48 V (DC only)
CT/VT DSP	8F	Standard 4CT/4VT
	8G	Sensitive Ground 4CT/4VT
	8H	Standard 8CT
	8J	Sensitive Ground 8CT
	8L	Standard 4CT/4VT w/ enhanced diagnostics
	8M	Sensitive Ground 4CT/4VT w/ enhanced diagnostics
	8N	Standard 8CT w/ enhanced diagnostics
	8R	Sensitive Ground 8CT w/ enhanced diagnostics
IEC 61850 Process Bus	81	8 Port IEC 61850 Process Bus Module
Digital I/O	XX	No Module
	4A	4 Solid State (No Monitoring) MOSFET Outputs
	4C	4 Solid State (Current w/opt Voltage) MOSFET Outputs
	4D	16 Digital Inputs with Auto-Burnish
	4L	14 Form-A (No Monitoring) Latchable Outputs
	67	8 Form-A (No Monitoring) Outputs
	6C	8 Form-C Outputs
	6D	16 Digital Inputs
	6E	4 Form-C Outputs, 8 Digital Inputs
	6F	8 Fast Form-C Outputs
	6K	4 Form-C & 4 Fast Form-C Outputs
	6L	2 Form-A (Current w/ opt Voltage) & 2 Form-C Outputs, 8 Digital Inputs
	6M	2 Form-A (Current w/ opt Voltage) & 4 Form-C Outputs, 4 Digital Inputs
	6N	4 Form-A (Current w/ opt Voltage) Outputs, 8 Digital Inputs
	6P	6 Form-A (Current w/ opt Voltage) Outputs, 4 Digital Inputs
	6R	2 Form-A (No Monitoring) & 2 Form-C Outputs, 8 Digital Inputs
	6S	2 Form-A (No Monitoring) & 4 Form-C Outputs, 4 Digital Inputs
	6T	4 Form-A (No Monitoring) Outputs, 8 Digital Inputs
	6U	6 Form-A (No Monitoring) Outputs, 4 Digital Inputs
	6V	2 Form-A (Cur w/ opt Volt) 1 Form-C Output, 2 Latching Outputs, 8 Digital Inputs
	6W	30 Contact Inputs - Pin Terminals[3]
	6X	18 Form-A (No Monitoring) Outputs - Pin Terminals[3]
Transducer I/O	5A	4 dcmA Inputs, 4 dcmA Outputs
	5C	8 RTD Inputs
	5D	4 RTD Inputs, 4 dcmA Outputs
	5E	4 dcmA Inputs, 4 RTD Inputs
	5F	8 dcmA Inputs
Inter-Relay Communications	7A	820 nm, multimode, LED, 1 Channel
	7B	1300 nm, multimode, LED, 1 Channel
	7C	1300 nm, singlemode, ELED, 1 Channel
	7H	820 nm, multimode, LED, 2 Channels
	7I	1300 nm, multimode, LED, 2 Channels
	7J	1300 nm, singlemode, ELED, 2 Channels
	7S	G.703, 2 Channels
	7T	RS422, 1 Channel
	7W	RS422, 2 Channels
	76	IEEE C37.94, 820 nm, multimode, LED, 1 Channel
	77	IEEE C37.94, 820 nm, multimode, LED, 2 Channel

Ordering Note:

1. To view all the options available for F35, please visit GE's On-Line Store at http://store.gedigitalenergy.com/viewprod.asp?model=F35
2. Redundant power supply only available in horizontal unit. If redundant is chosen, must be same type. Maximum 2 per chassis
3. Option available soon

IEC is a registered trademark of Commission Electrotechnique Internationale. IEEE is a registered trademark of the Institute of Electrical Electronics Engineers, Inc. Modbus is a registered trademark of Schneider Automation. NERC is a registered trademark of North American Electric Reliability Council. NIST is a registered trademark of the National Institute of Standards and Technology.

GE, the GE monogram, Multilin, FlexLogic, EnerVista and CyberSentry are trademarks of General Electric Company.

GE reserves the right to make changes to specifications of products described at any time without notice and without obligation to notify any person of such changes.

Copyright 2018, General Electric Company.

imagination at work

GEA-12666J(EN)
English
180606