Grid Solutions
a GE and Alstom joint venture

SPVL

Semi-pantograph disconnect switch 145 kV to 800 kV

Grid Solutions is the world's largest manufacturer of disconnect switches with over 140,000 units installed in more than 130 countries around the world.

CUSTOMER BENEFITS

- Reduced substation space requirement (up to -30%)
- Pollution and ice-free L-contact
- Tested for up to 10,000 operations
- Built-in arcing horns and bus transfer contacts
- Built-in ground switches available
- Virtually maintenance-free
- Easy start-up and commissioning

The real performer in harsh conditions

Grid Solutions' disconnect switches are the result of over 75 years of experience in developing high voltage switches that have proven their reliability in the scorching climates of Arizona (USA), Australia and Sudan, in the extremely cold territories of Canada, Russia and Sweden, in the tropical weather of Panama, Indonesia, Malaysia and Venezuela and in regions with intense seismic activity such as Chile and California (USA).

RELIABILITY

The SPVL is a rugged performer even in the most adverse operating conditions including high winds and heavy ice and is always stable in the closed position during short circuits.

SPACE SAVING DESIGN

The increasing cost of land and the difficulty in obtaining suitable substation sites have emphasized the need for compact designs. The SPVL is a space saving vertical reach disconnect switch on which the semi-pantograph arm connects the lower busbar to the upper one. By using vertical rather than horizontal separation, the SPVL design provides substation designers with space reductions up to 30%.

FLEXIBILITY

The SPVL can be installed directly below and in line with the overhead bus or on the diagonal at the point of bus crossover. The terminal pads can be arranged so that the lower busbar is in line or perpendicular to the switch. The specific L contact limits its application to tubular busbars only. The SPV model is available for strain busbars.

L-CONTACT

The SPVL is equipped with the unique L-Contact designed for switches used in heavily polluted or iced sites as well as for those disconnect switches where an extended mechanical endurance (10,000 operations) is required.

PERFORMANCE

In the open position, the blade sections fold upon themselves, thus offering a maximum blade dimension slightly greater than half the open gap dimension and making it even more compact than a standard pantograph switch. Closure of the switch is created by rotation of the insulator which causes the blade to unfold in such a manner that the protected tulip contact rises in a straight vertical path. When engaging the fixed contact, the mobile arm enters the guiding bell and the fixed contact matches the mobile one.

QUALITY

Grid Solutions prides itself on being the leading supplier of disconnect switches in the world. Our design principles, the technical know-how and experience of our experts and the careful selection of suppliers to ensure that only top quality materials are used during production ensure an excellent life cycle cost.

TECHNICAL DATA (ANSI)*

Rated voltage kV	Rated current A / Short time current kA	BIL kV	A inches	B inches	C inches	D inches	E inches	F inches	G inches	I inches
145	4,000 / 80	650	5' 2½"	9' 10"	4' 3¼"	1' 4¾"	1' 7¾"	1' 1½"	2' 6"	6¾"
170	4,000 / 80	750	5' 10¼"	9' 10"	4' 3¼"	1' 4¾"	1' 7¾"	1' 1½"	2' 6"	6¾"
245R	4,000 / 80	950	7' 4¼"	13' 1½"	5' 7"	1' 4¾"	1' 7¾"	1' 1½"	2' 6"	6¾"
245	4,000 / 80	1,050	8' 4¼"	13' 1½"	5' 7"	1' 4¾"	1' 7¾"	1' 1½"	2' 6"	6¾"
362	4,000 / 80	1,300	10' 7¼"	15' 9"	7' 8½"	1' 11½"	2' 7½"	1' 3¾"	3' 3¼"	7¾"
550	4,000 / 80	1,800	13' 7½"	21' 11¾"	8' 6¼"	1' 11½"	3' 3¼"	1' 3¾"	3' 3¼"	7¾"
800	4,000 / 80	2,050	17' 1¼"	25' 11"	12' 9½"	1' 11½"	3' 3¼"	1' 3¾"	3' 3¼"	7¾"

* IEC ratings also available

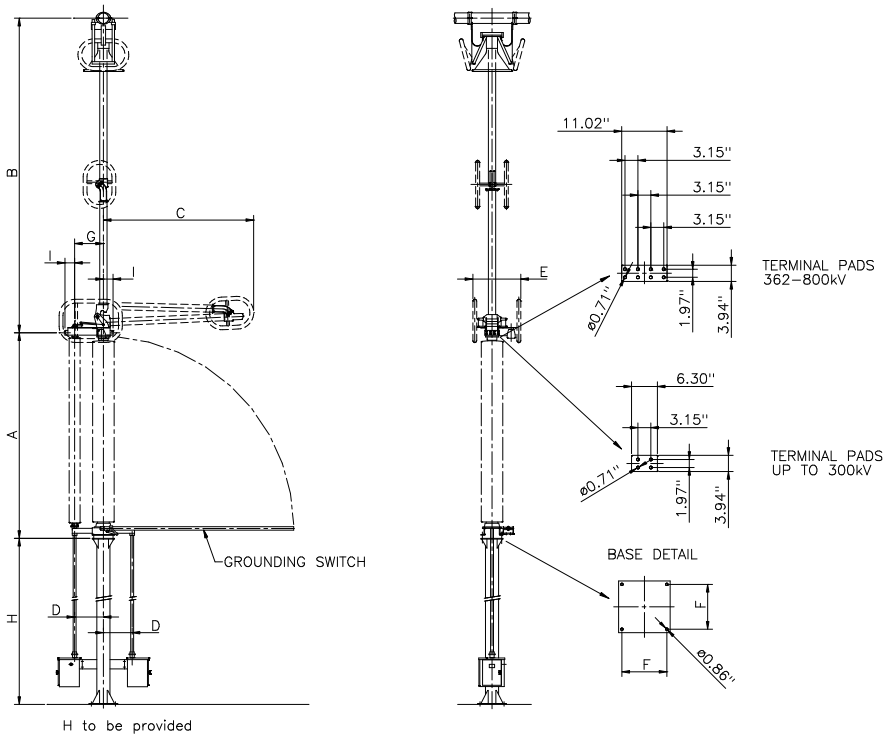

Customized layouts available upon request. Phase-to-phase distance defined by substation layout.

SAFETY

The very clear busbar arrangement and routing results in increased safety during operation and maintenance.

CERTIFICATION

All disconnect switch production facilities worldwide are certified according to ISO 9001, ISO 14001 and OHSAS 18001. Grid Solutions designs, manufactures, tests and delivers its disconnect switches in accordance with the latest IEEE/ANSI
and IEC standards, or GB Chinese national standards.

OPTIONAL DEVICES

The SPVL is fitted with bus transfer contacts (IEC 62271-102 Annex B). The integrated ground switches used on double circuit overhead lines can also be fitted with induced current switching devices (IEC 62271-102 Annex C).

INSTALLATION & MAINTENANCE

The SPVL does not require any special tools to be adjusted and is recognized worldwide as an easy to install and adjust disconnect switch.

The SPVL is virtually maintenance-free thanks to its lifetime greased or self-lubricating parts and corrosion-free materials.

For more information please contact GE Grid Solutions

Worldwide Contact Center

Web: www.GEGridSolutions.com/contact
Phone: +44 (0) 1785 250 070

www.GEGridSolutions.com

Grid-AIS-L3-SPVL_IEEE_ANSI-0081-2015_11-EN. © General Electric Corporation 2015. All rights reserved. Information contained in this document is indicative only. No representation or warranty is given or should be relied on that it is complete or correct or will apply to any particular project. This will depend on the technical and commercial circumstances. It is provided without liability and is subject to change without notice. Reproduction, use or disclosure to third parties, without express written authority, is strictly prohibited.