BUS2000 Busbar Differential Protection System

Differential overcurrent system with percentage restraint protection

Typical Busbar Arrangements

- Single Busbar
- Double Busbar with Coupler
- Breaker and a Half
- Double Breaker
- Double Busbar with Transfer Bar
- Segregated Busbars with Coupler

Typical Single Busbar Arrangement

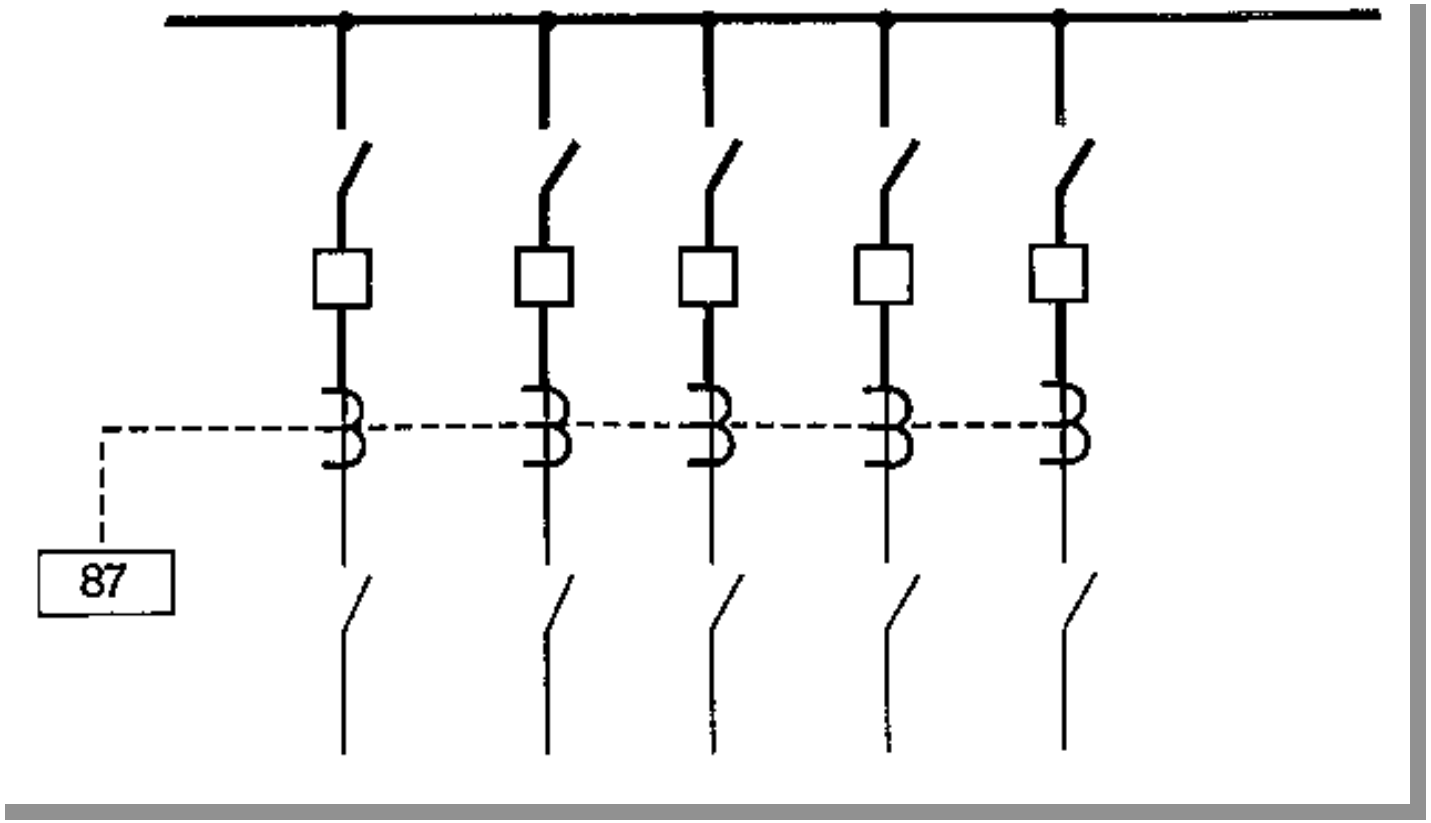

Typical Double Busbar with Coupler Arrangement

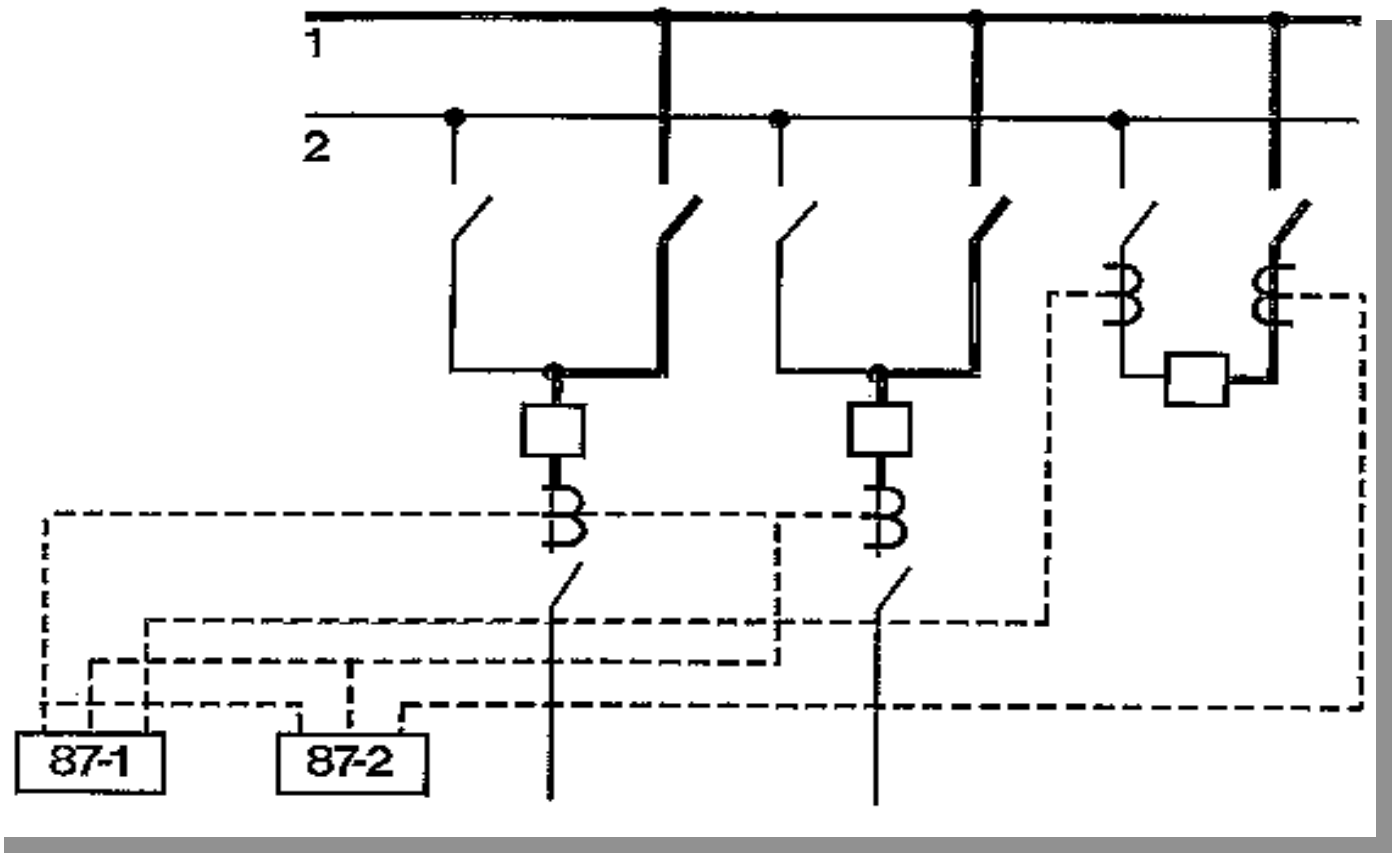

Typical Breaker and a Half Arrangement

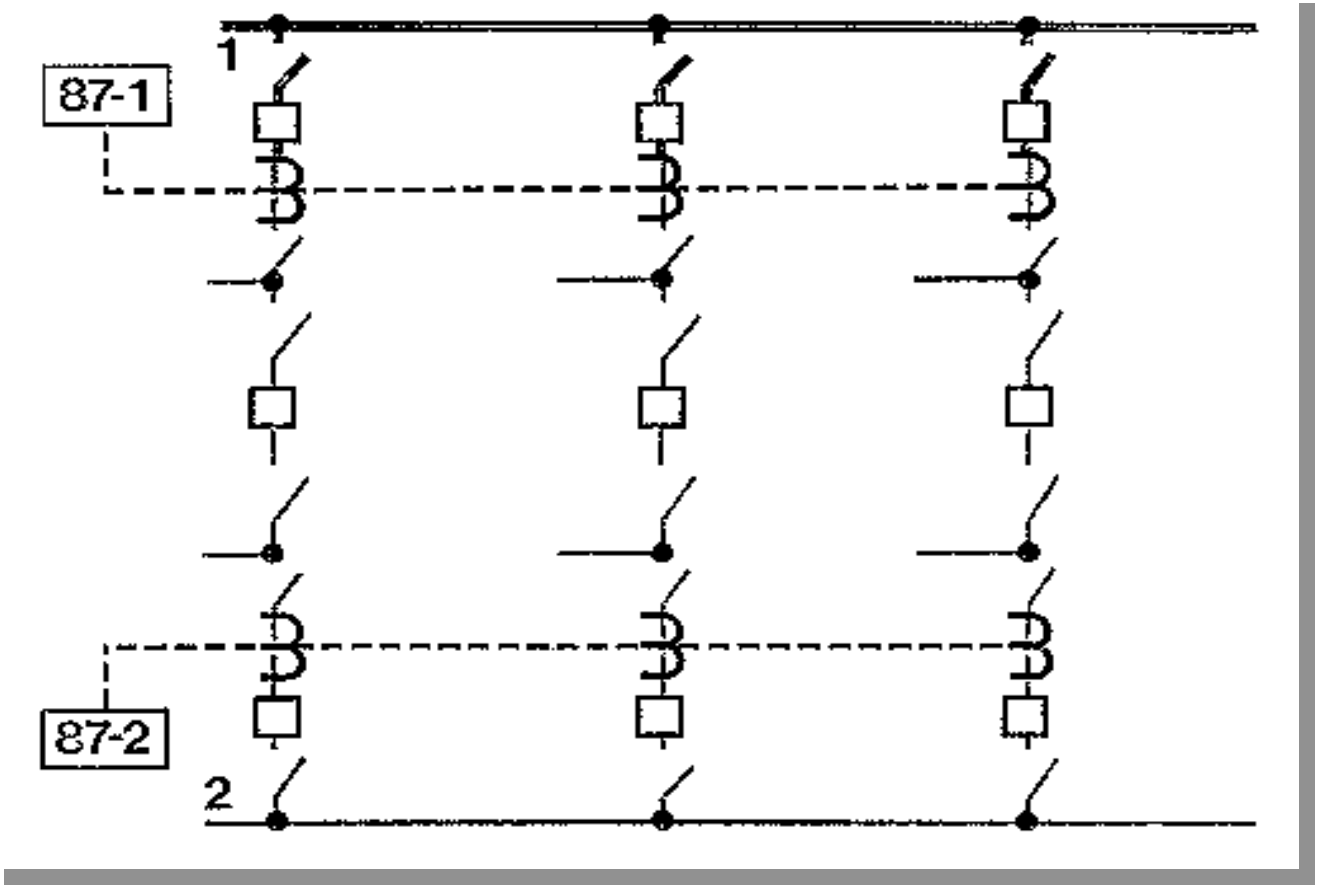

Typical Double Breaker Busbar Arrangement

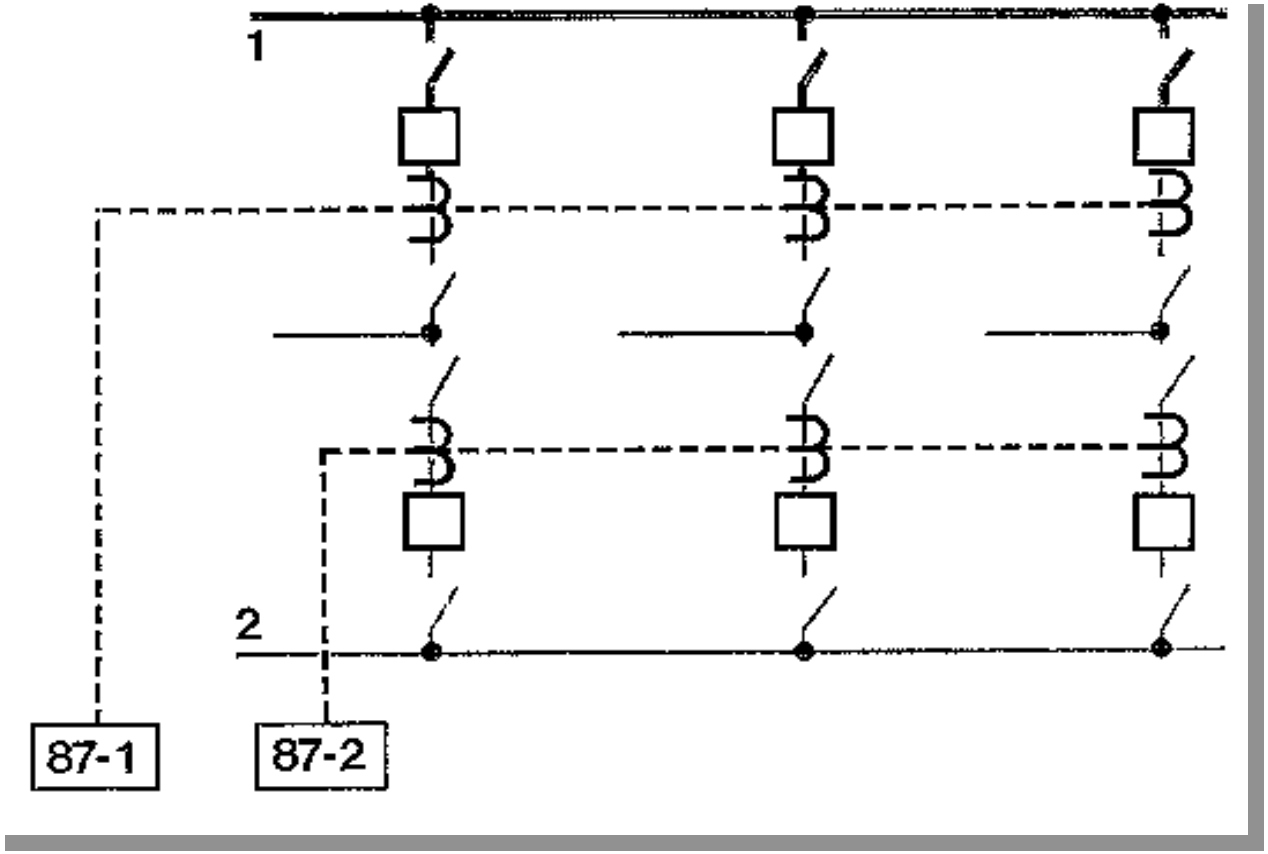

Typical Double Busbar with Transfer Bar

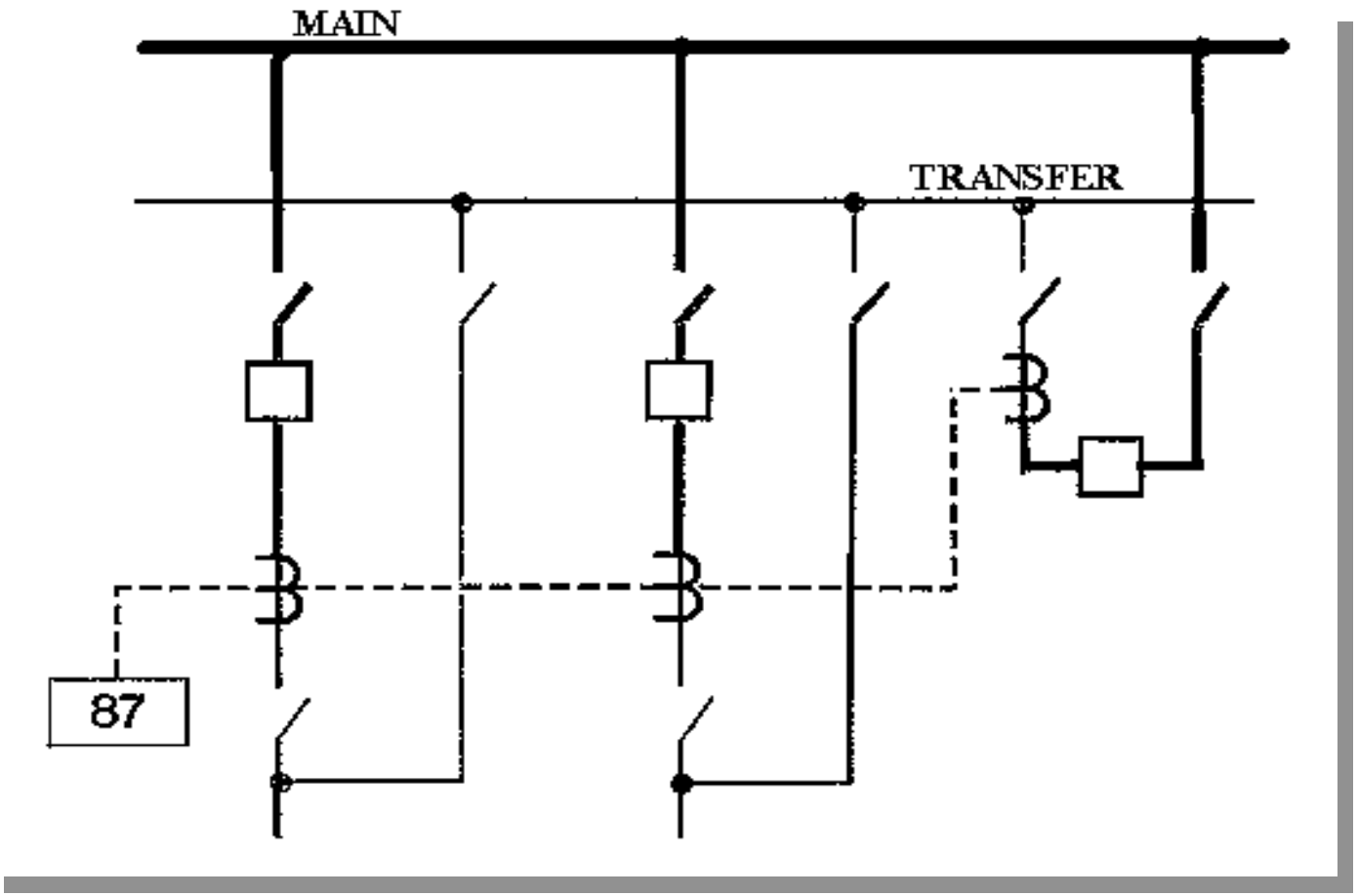

Typical Segregated Busbar with Coupler

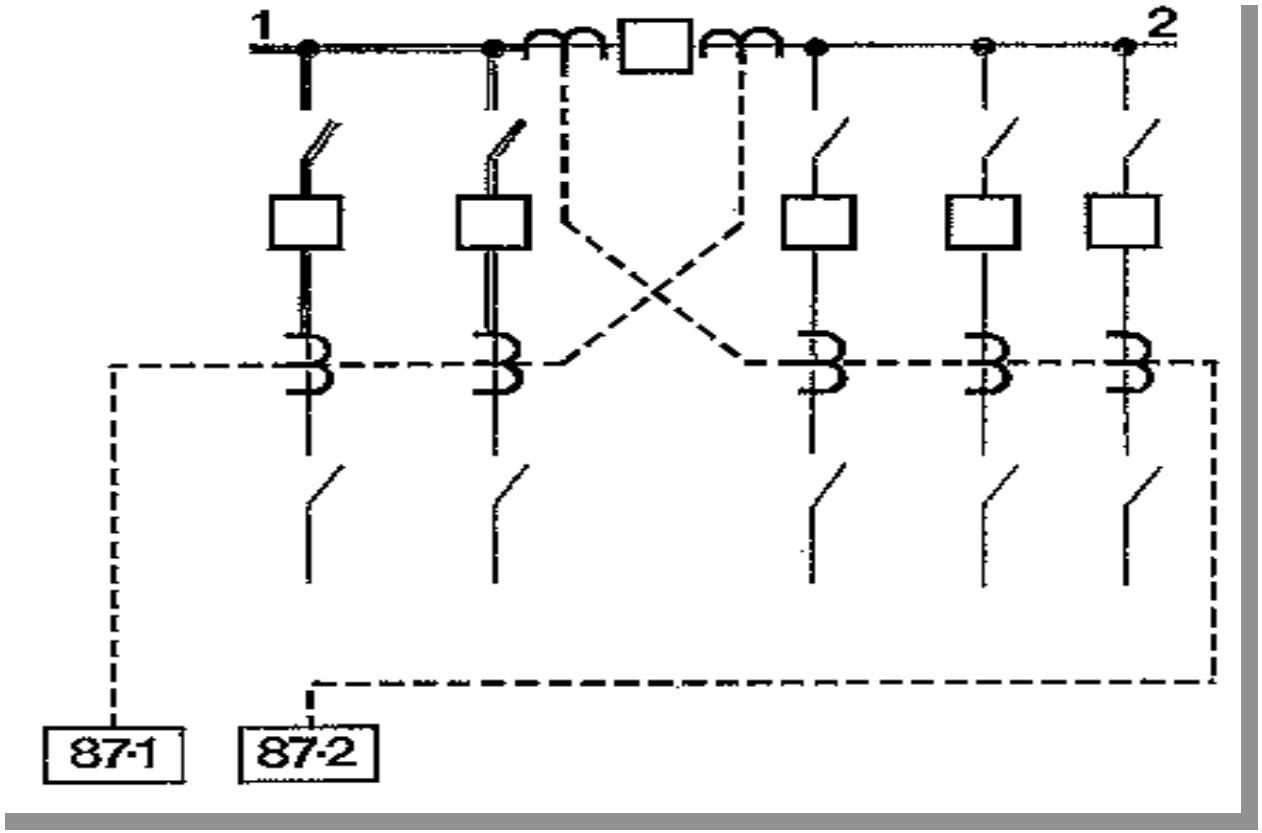

Types of Protection Schemes

- Low Impedance
- High Impedance
  - *Medium Values*
  - *High Values*

Low Impedance Protection

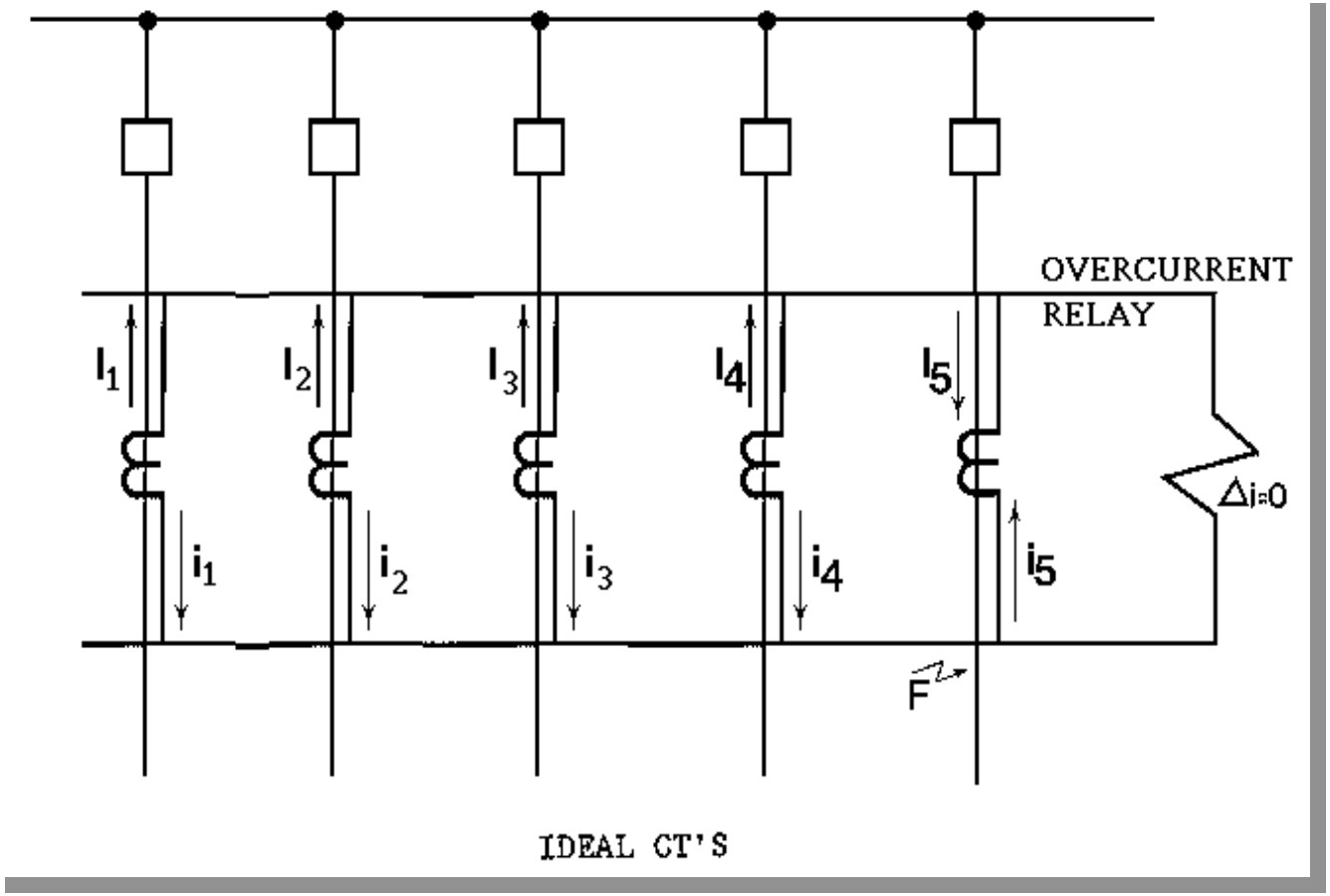

Saturation of the Auxiliary CTs

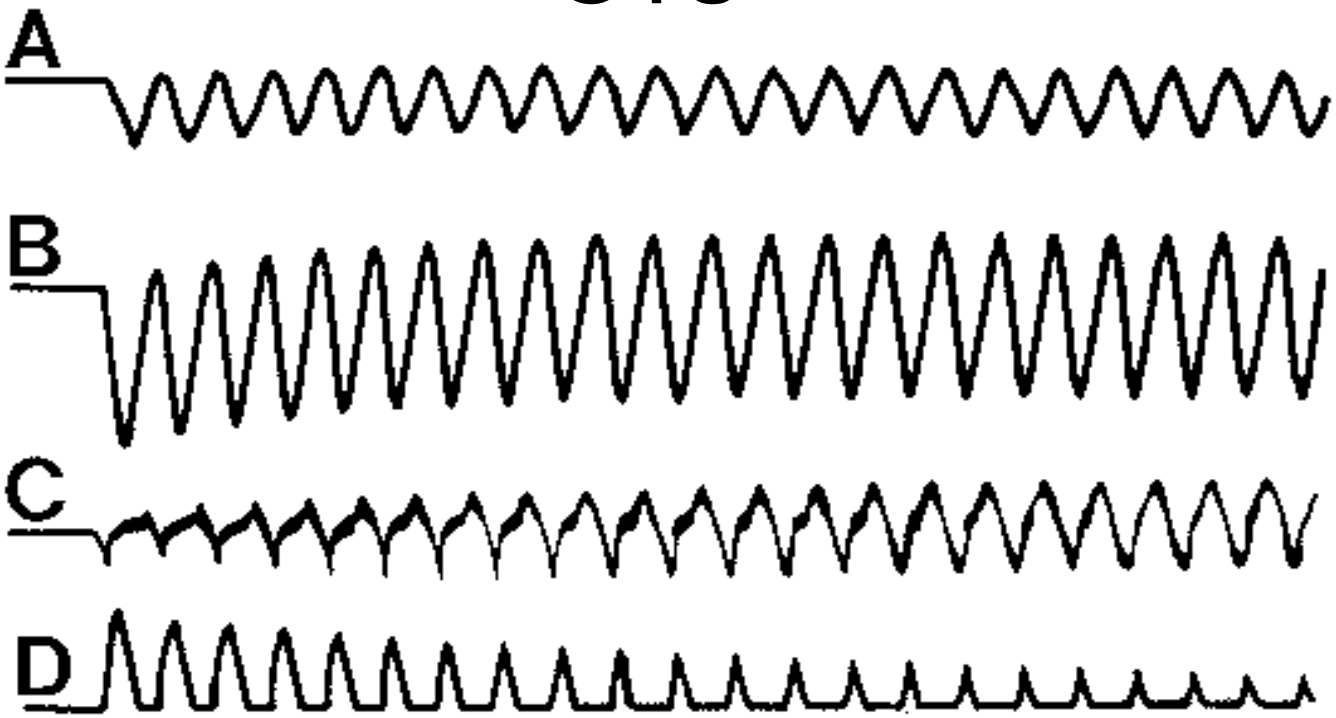

- *A. Primary Fault Current*
- *B. Secondary Current from the Source CTs*
- *C. Secondary Current in the Faulty CT*
- *D. Differential Current*

Low Impedance Protection Current Detection + Second Criteria

- Time-delayed Overcurrent Relays
- Directional Overcurrent Relays
- Restraint Overcurrent relays
- CT Saturation Detectors

High Impedance Protection Scheme

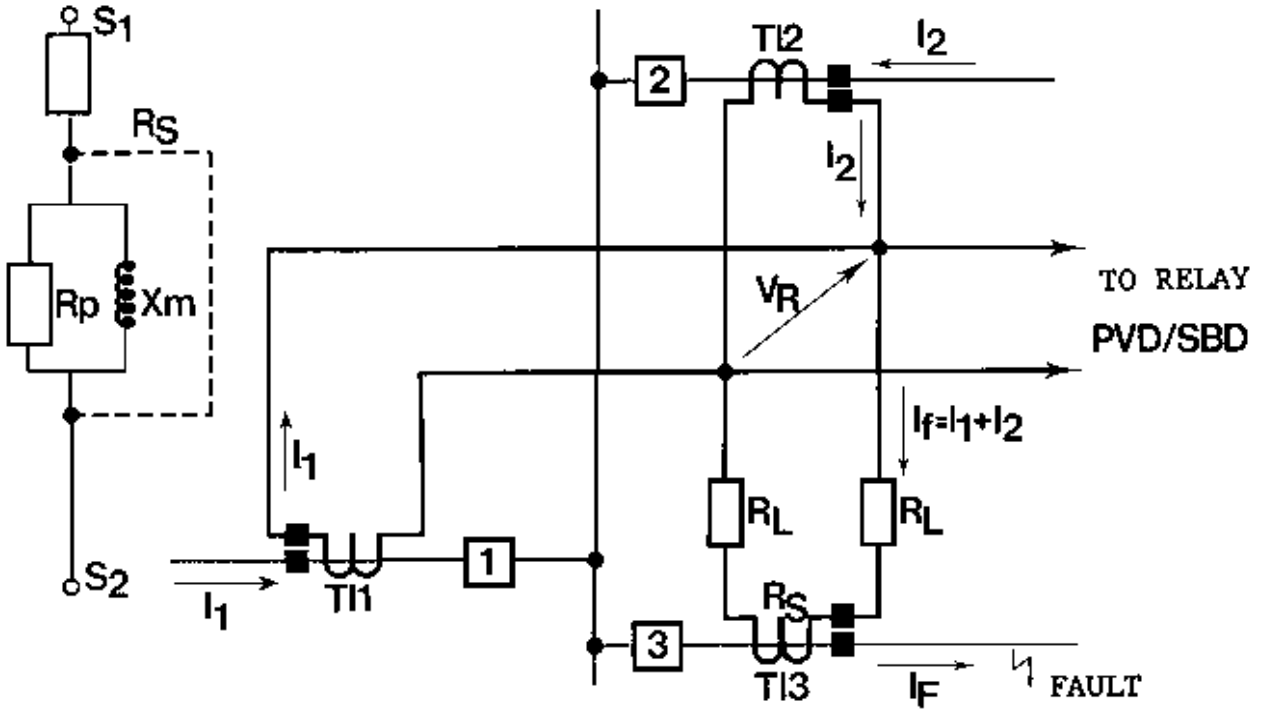

High Impedance Protection

- $V_R = I_F \times (2R_L + R_S)$
- $V_{OP} > V_R$ Stability Criteria
- $V_S > V_{OP}$ Operation Criteria
- TI_3 Totally Saturated
- R_S CT Secondary Winding R Value

-
- *WHERE:*
- R_L = *CONNECTION WIRES RESISTANCE*
- I_F = *SECONDARY RMS CURRENT VALUE IN* TI_3
- V_R = *DIFFERENTIAL RELAY VOLTAGE*
- V_S = *CT MINIMUM SATURATION VOLTAGE*
- V_{OP} = *OPERATION VOLTAGE*

Differential Overcurrent Relay with Percentage Restraint & Stabilizing Resistor

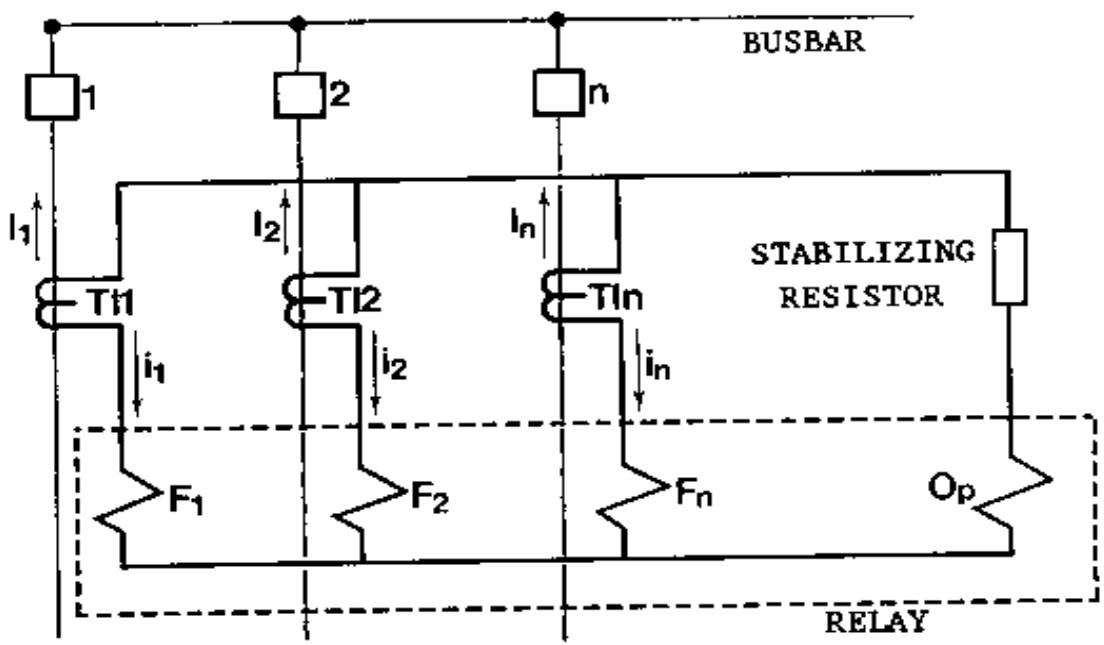

Iop = Operating current
If = Restraint current
Id = Differential current
K = Restraint percentage
RE = Stabilizing resistance
Rmax= Maximum secondary resistance of the saturated circuit

Iop > Id - KIf Operating criteria
RE > Rmax (1 - K)/2K Stability criteria

BUS2000-External Fault

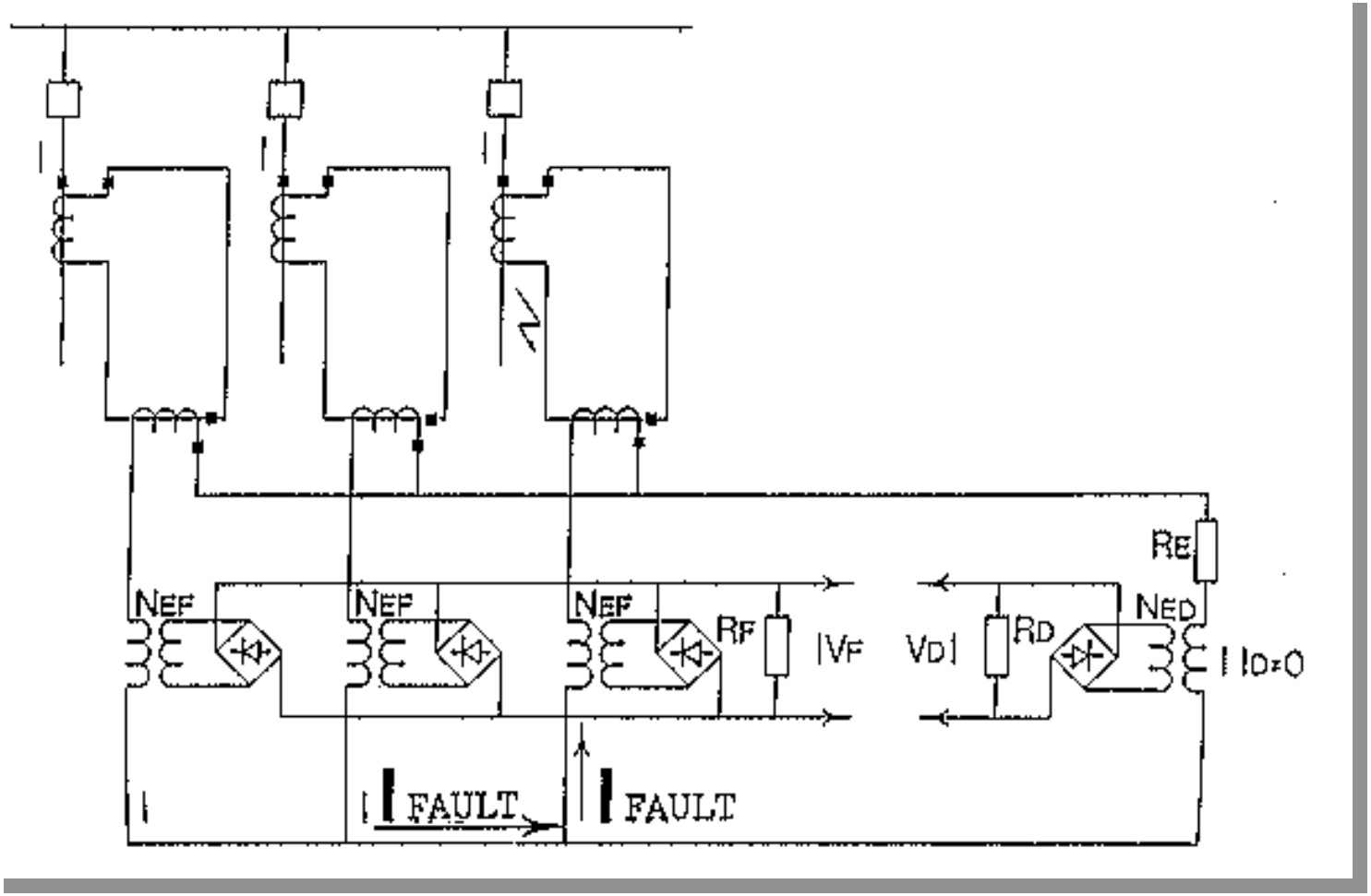

BUS2000-Internal Fault

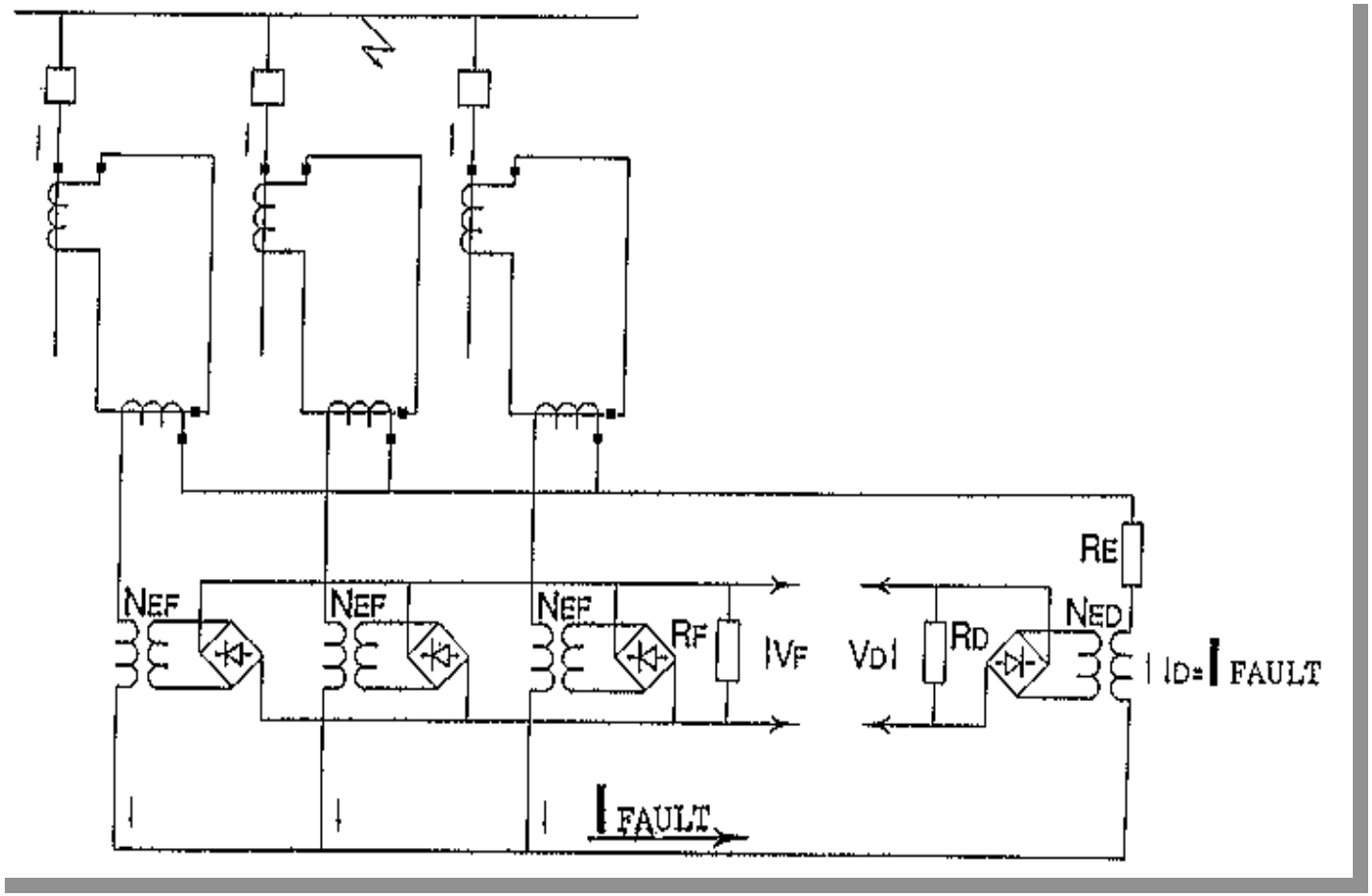

BUS2000 - Differential Unit Block Diagram

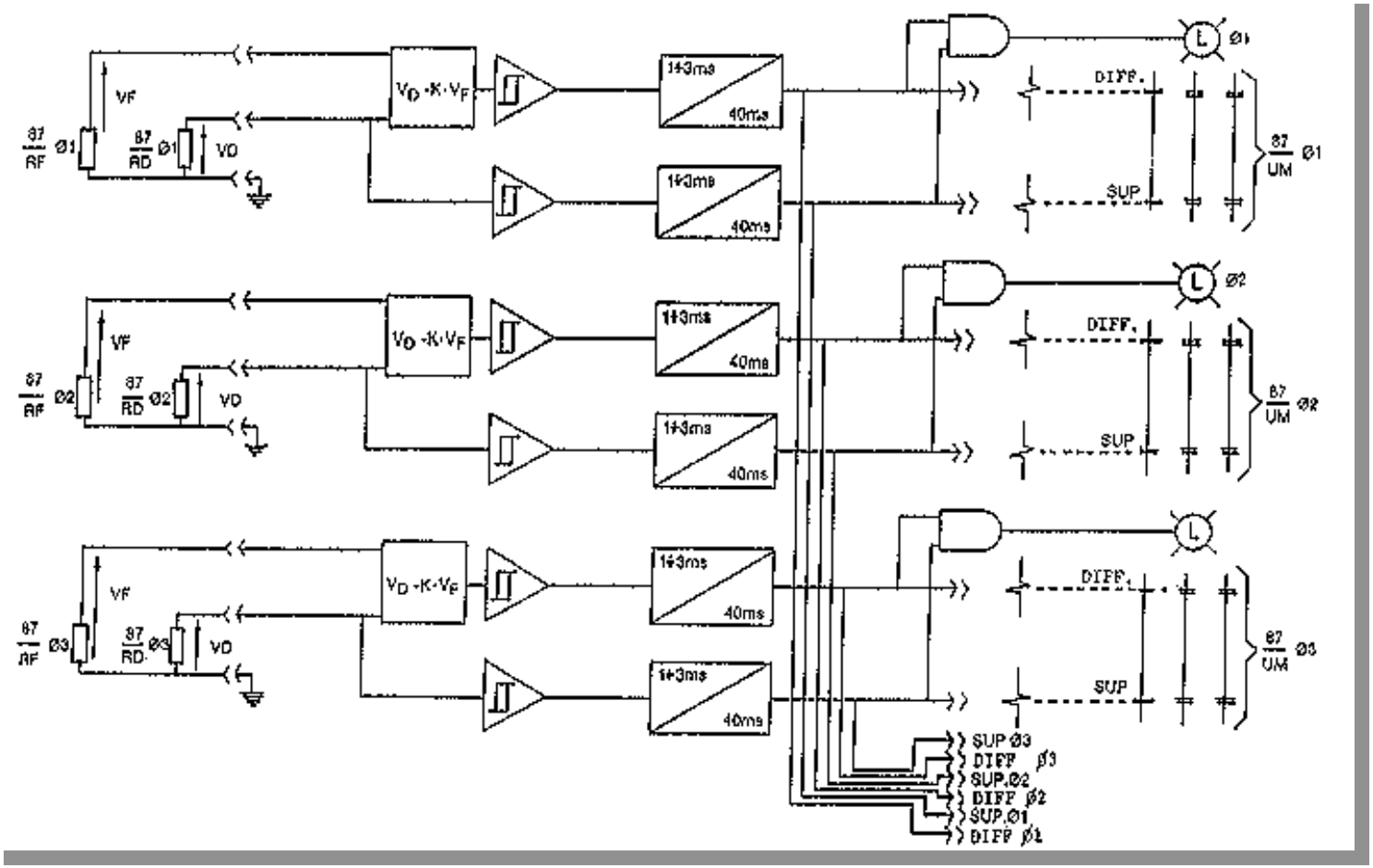

BUS2000-Sensitivity Algorithm (1)

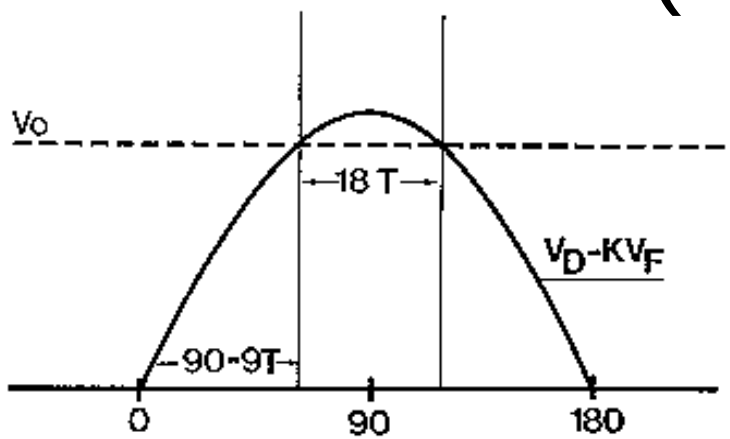

$$\left.\begin{array}{l} V_D = I_D \cdot N_{ED} \cdot R_D \\ V_F = I_F \cdot N_{EF} \cdot R_F \\ (V_D - K.V_F)\sqrt{2}\,\mathrm{SIN}(90-9T) \geq V_0 \end{array}\right\} \Longrightarrow$$

$$I_D \cdot N_{ED} \cdot R_D - K I_F \cdot N_{EF} \cdot R_F \geq \frac{V_0}{\sqrt{2}\,\mathrm{SIN}(90-9T)}$$

WHERE:

$N_{ED} = N_{EF} = N$	TRANSACTORS RATIO
$R_D = R_F = R$	RESISTANCE ON SECONDARY TRANSACTORS SIDE
V_D	DIFFERENTIAL VOLTAGE
V_F	RESTRAINT VOLTAGE
V_0	LEVEL DETECTOR VOLTAGE (DC)
I_D	DIFFERENTIAL CURRENT
I_F	ARITHMETIC SUM OF THE LINE CURRENTS
K	RESTRAINT PERCENTAGE
T	TIME

$$I_D - K I_F \geq V_0 \cdot \frac{1}{\sqrt{2}\,\mathrm{SIN}(90-9T)} \cdot \frac{1}{N.R}$$

BUS2000-Sensitivity Algorithm (2)

$$I_D - KI_F \geqslant V_0 \cdot \frac{1}{\sqrt{2}\ \mathrm{SIN}\ (90-9T)} \cdot \frac{1}{N\ .\ R}$$

$V_0 = 0.137\ (\mathrm{VDC})$

$T = 1.5\ (\mathrm{MS})$

$N = 0.01$

$R = 100\ (\mathrm{ohm})$

$$\Rightarrow V_0 \cdot \frac{1}{\sqrt{2}\ \mathrm{SIN}\ (90-9T)} \cdot \frac{1}{N.R} = 0.1$$

$$I_D - KI_F \geqslant 0.1 \qquad I_D \geqslant KI_F + 0.1$$

BUS2000-Sensitivity Algorithm (3)

$$I_D \geqslant KI_F + 0.1$$

For internal fault: $I_D = I_F$

$$I_D \geqslant \frac{0.1}{1-K}$$

K	Sensitivity in Amps.
0.5	0.2
0.6	0.25
0.7	0.33
0.8	0.5

External Fault with CT Saturation

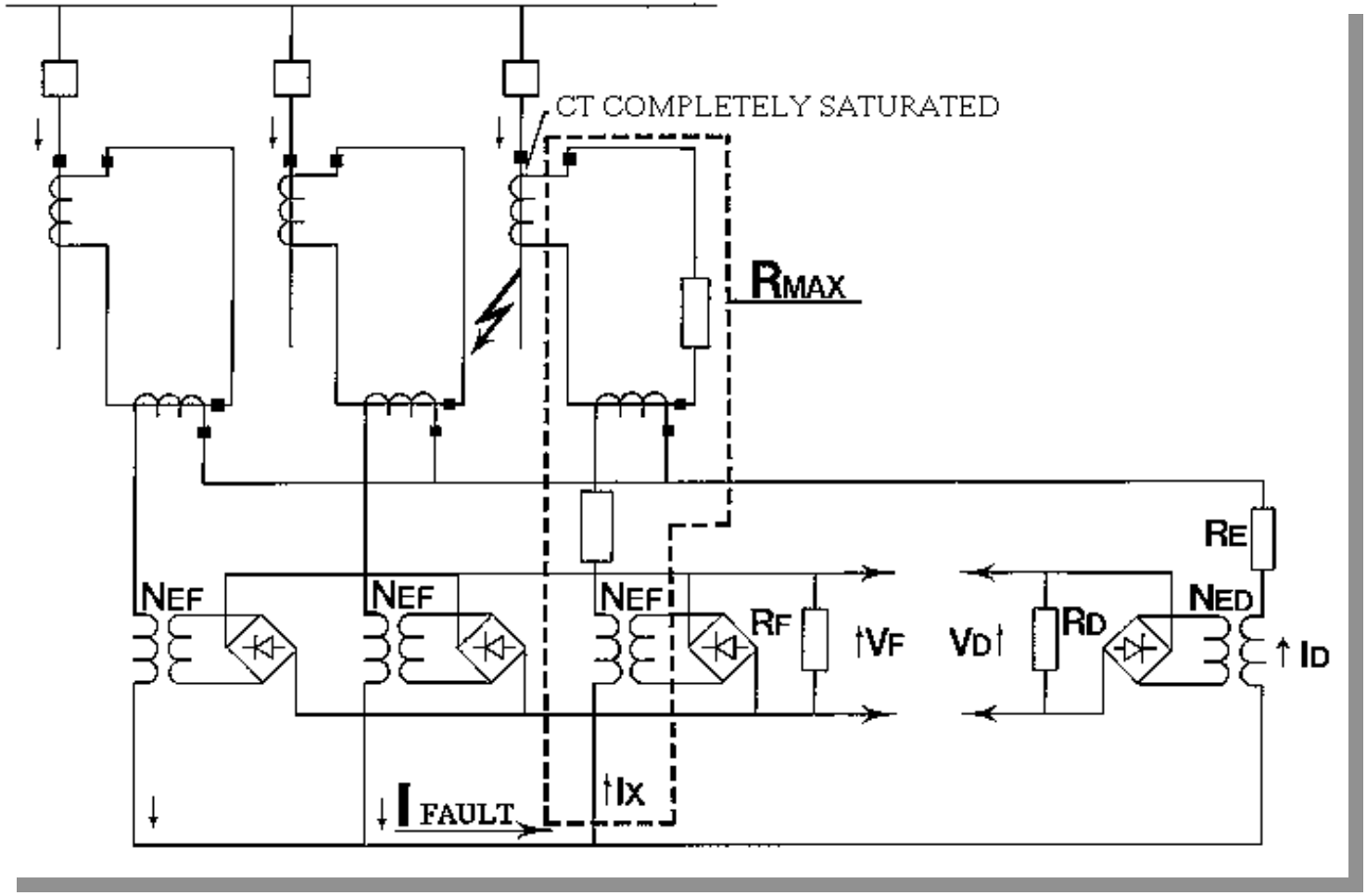

BUS2000-Stability Algorithm

$$\left.\begin{array}{l} I_D = I_{FAULT} - I_X \\ I_D \,.\, R_E = I_X \,.\, R_{MAX} \end{array}\right\} \Rightarrow I_{FAULT} = I_D + I_D \frac{R_E}{R_{MAX}} = I_D \left(1 + \frac{R_E}{R_{MAX}}\right)$$

$$I_F = I_{RESTRAINT} = I_{FAULT} + I_X = I_D\left(1 + \frac{R_E}{R_{MAX}}\right) + I_D \frac{R_E}{R_{MAX}} = I_D\left(1 + 2\frac{R_E}{R_{MAX}}\right)$$

The relay will trip if:

$$I_D \geq K\, I_F + 0{,}1$$

$$I_D \geq K\, I_D\left(1 + 2\frac{R_E}{R_{MAX}}\right) + 0{,}1$$

$$I_D\left[1 - K\left(1 + 2\frac{R_E}{R_{MAX}}\right)\right] \geq 0{,}1$$

The relay will not trip if:

$$I_D\left[1 - K\left(1 + 2\frac{R_E}{R_{MAX}}\right)\right] < 0{,}1$$

For more security we can say that the relay will not trip if:

$$I_D\left[\left(1 - K\left(1 + 2\frac{R_E}{R_{MAX}}\right)\right)\right] < 0 \Rightarrow 1 - K\left(1 + 2\frac{R_E}{R_{MAX}}\right) < 0 \Rightarrow$$

$$1 < K\left(1 + 2\frac{R_E}{R_{MAX}}\right) \Rightarrow$$

$$R_{MAX} < K\, R_{MAX} + 2\, K\, R_E \Rightarrow$$

$$R_E > \frac{R_{MAX}(1 - K)}{2K}$$

BUS2000-Stability Limit

$$R_E > \frac{R_{MAX}\ (1 - K)}{2K}$$

K	Minimum RE value to keep the stability criteria
0.5	$\frac{R_{MAX}}{2}$
0.6	$\frac{R_{MAX}}{3}$
0.7	$\frac{R_{MAX}}{4.67}$
0.8	$\frac{R_{MAX}}{8}$

BUS2000-Operation Characteristic

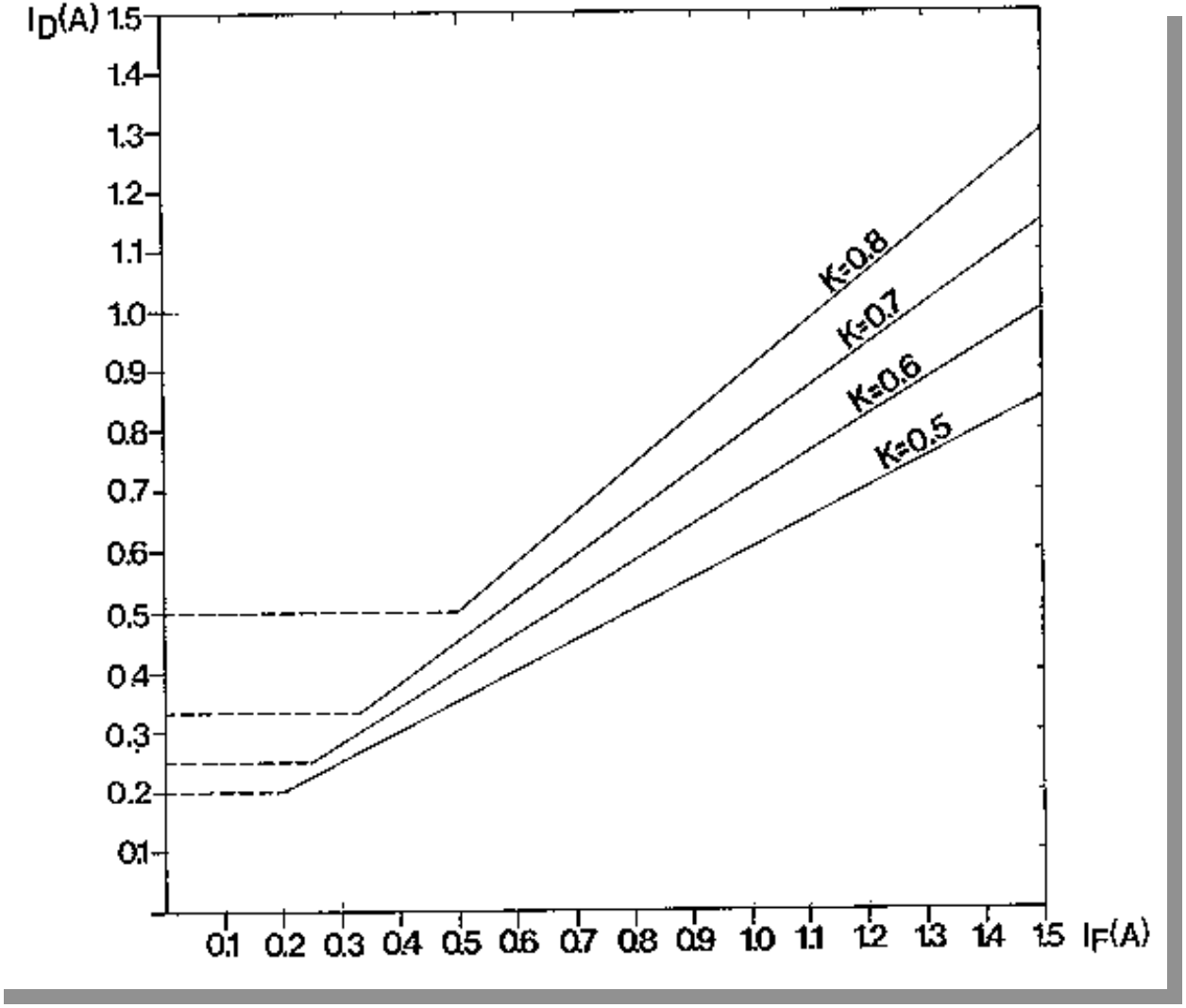

BUS2000-Auxiliary CT. Magnetizing Curve of the Secondary Side

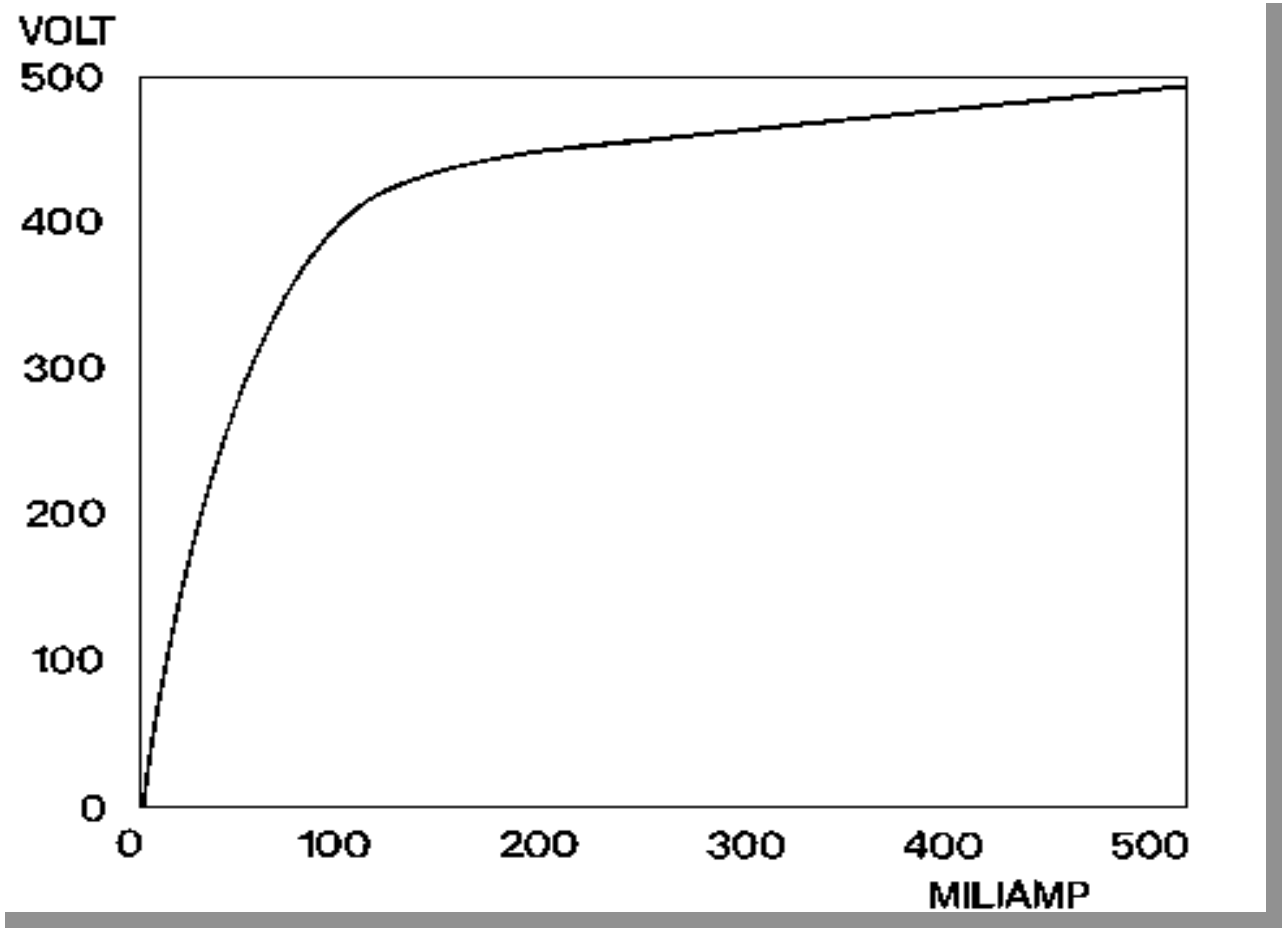

BUS2000-Alarm Unit Block Diagram

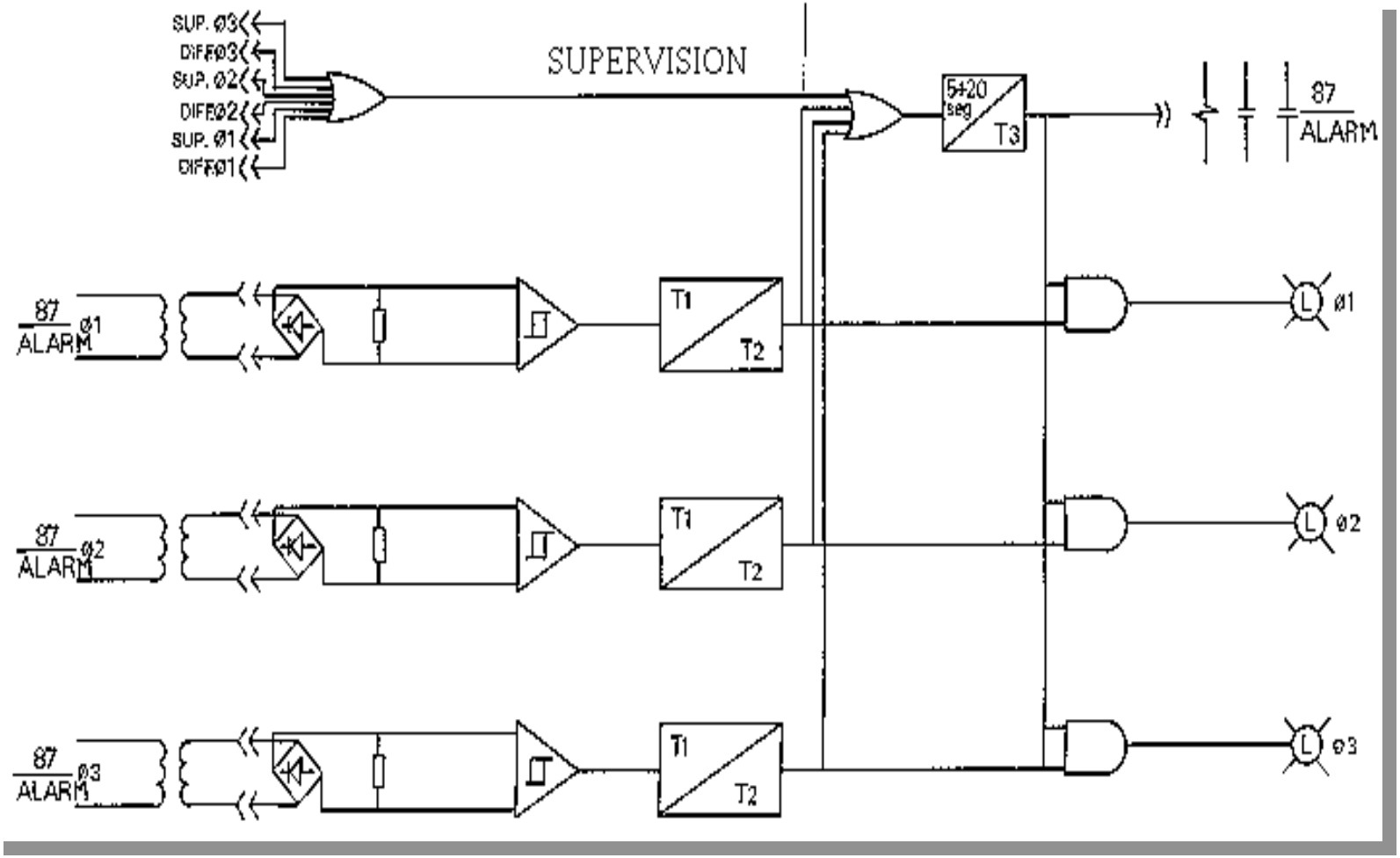

Breaker Failure Block Diagram

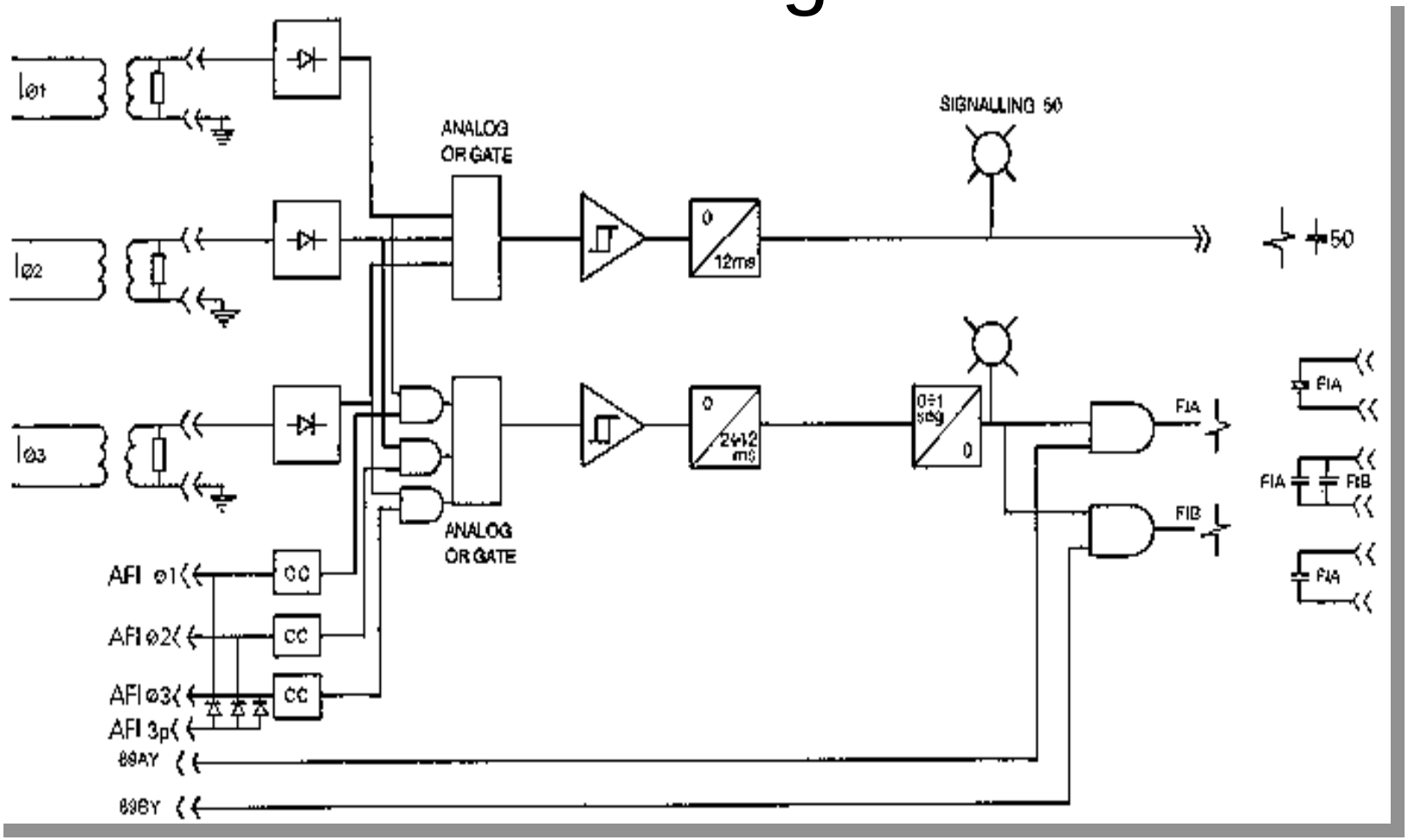

Numerical Monitoring Module

- Differential and Restraint Currents Metering Information
- Full Human-Machine Interface (Keypad + Graphic Display)
- IRIG-B Time Synchronization
- Alarm Treatment
- Differential Protection Outputs Status

Numerical Monitoring Module (cont)

- Oscillography Waveform Capture
- Event Record
- RS232 or fiber optics Communications
- Configurable I/O
- Undervoltage Supervision

BUS2000-Single Busbar (6 feeders) Differential Protection

BUS2000-Overcurrent and Breaker Failure (5 feeders) Protection

BUS2000-Test Rack

BUS2000-Numerical Monitoring Module

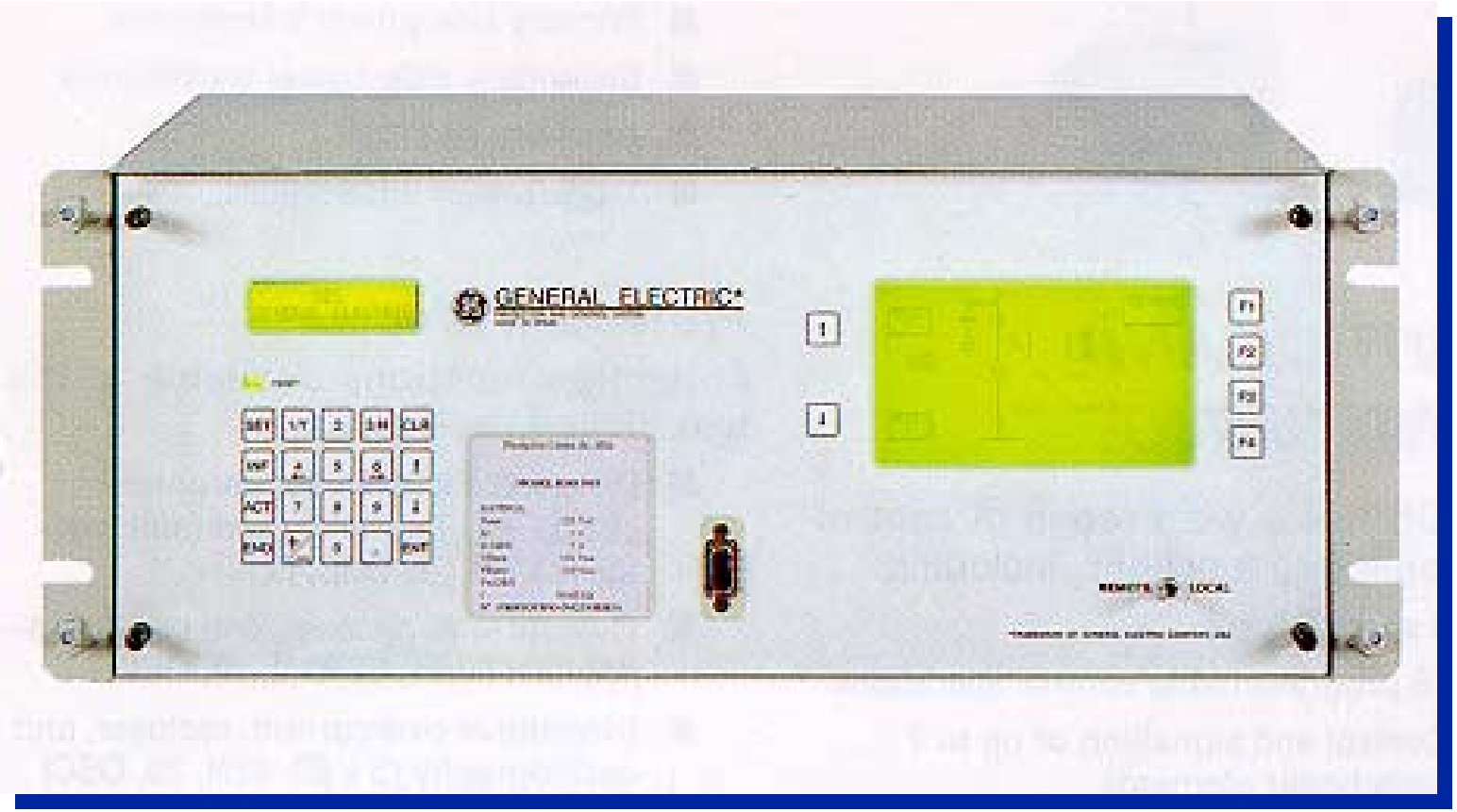

External Connections Diagram of Single Busbar BUS2000 System

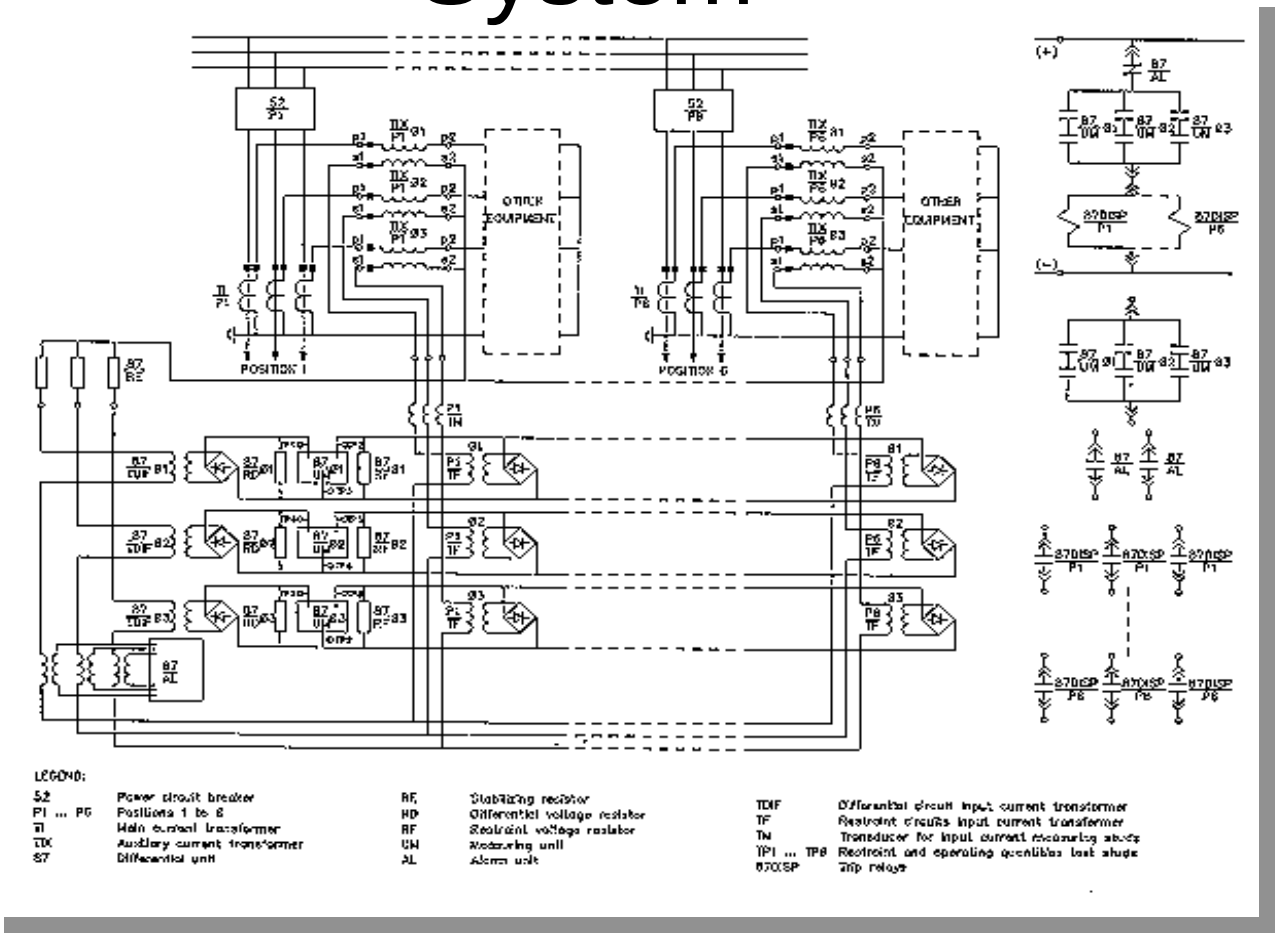

BUS2000-Settings

- K for Sensitivity
- K and RE as low as possible
- RE for CT requirements for Overvoltage Conditions

Key Advantages

- Flexibility
- Independent setttings for K and RE done in the field without any additional changes
- Wide Setting Range
- Suitable for all kinds of installations
- Measurement Units Supervision
- Current Circuits Supervision

Key Advantages (cont'd)

- Single-Three Phase Breaker Failure
- Test Rack Independent from the protection
- Easy Commisioning (accesible terminal blocks)
- Suitable for updating of old Substations
- Operating Principles well proven in the field
- Numerical Monitoring Module